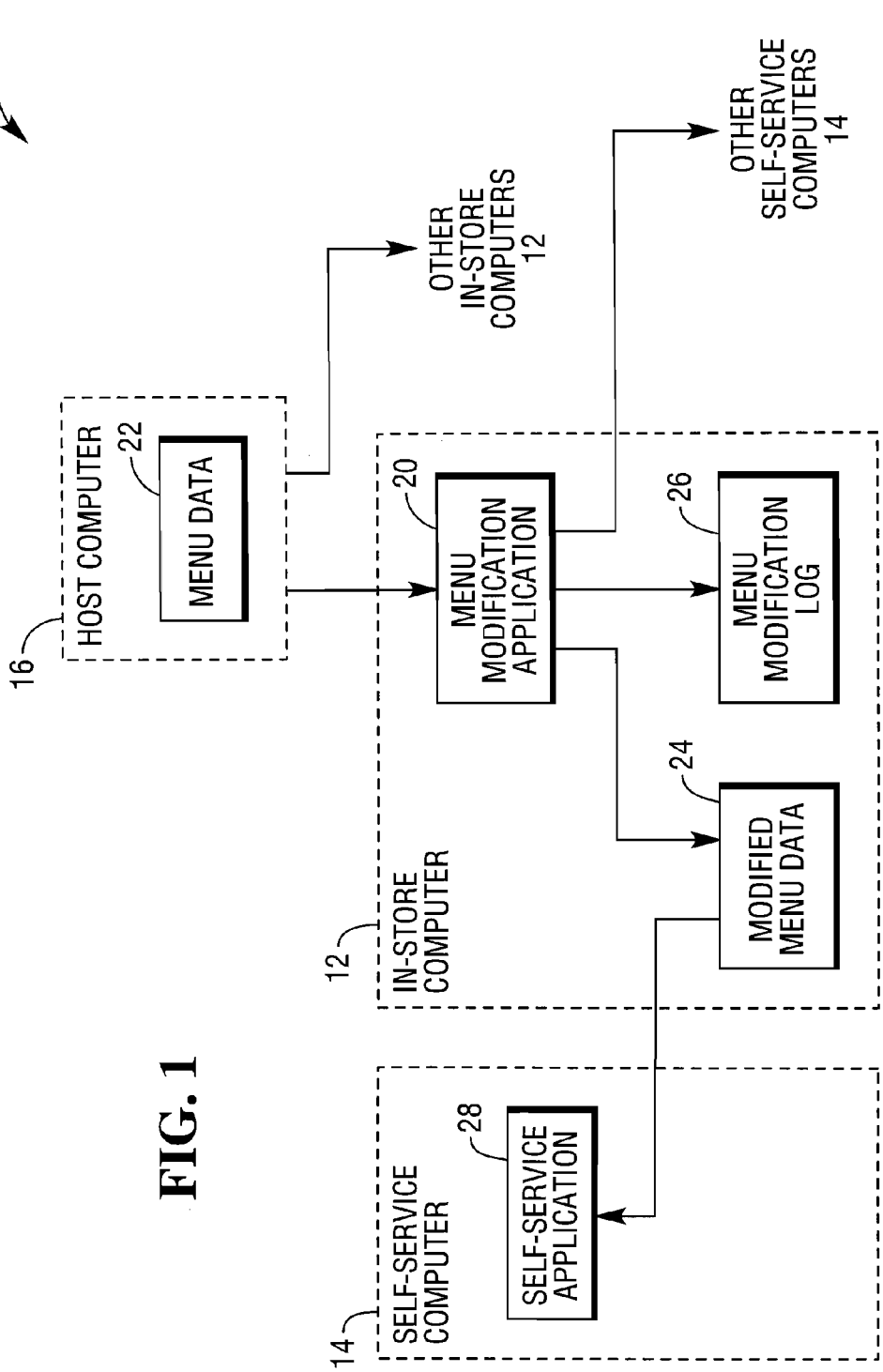
10
HOST COMPUTER
16
MENU DATA
22
OTHER IN-STORE COMPUTERS 12
OTHER SELF-SERVICE COMPUTERS 14
IN-STORE COMPUTER
12
MENU MODIFICATION APPLICATION
20
MENU MODIFICATION LOG
26
MODIFIED MENU DATA
24
SELF-SERVICE COMPUTER
14
SELF-SERVICE APPLICATION
28

FIG. 1