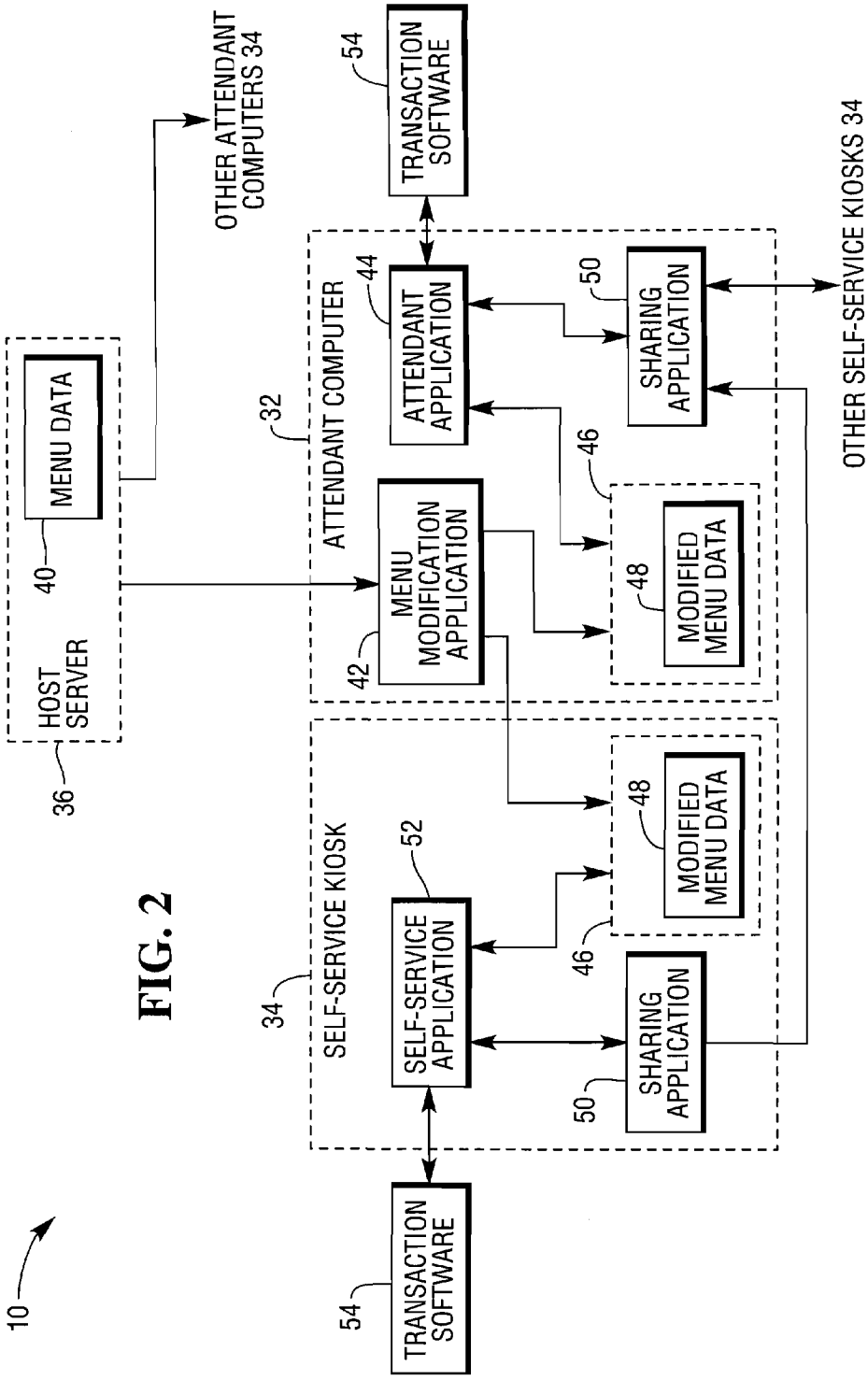
10
HOST SERVER
36
MENU DATA
40
OTHER ATTENDANT COMPUTERS 34
ATTENDANT COMPUTER
32
MENU MODIFICATION APPLICATION
42
ATTENDANT APPLICATION
44
TRANSACTION SOFTWARE
54
SHARING APPLICATION
50
MODIFIED MENU DATA
48
46
OTHER SELF-SERVICE KIOSKS 34
SELF-SERVICE KIOSK
34
SELF-SERVICE APPLICATION
52
SHARING APPLICATION
50
MODIFIED MENU DATA
48
46
TRANSACTION SOFTWARE
54

FIG. 2