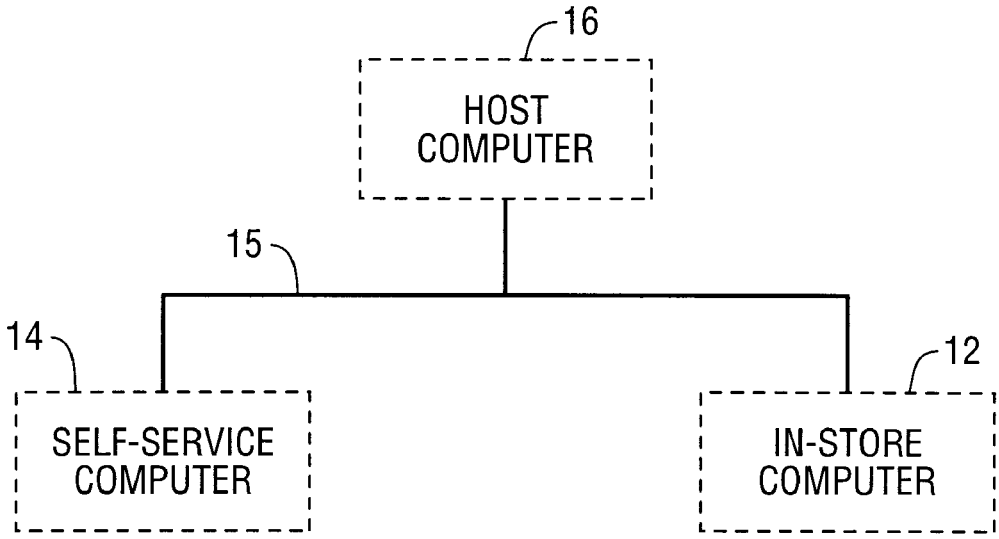
16
HOST
COMPUTER
15
14
SELF-SERVICE
COMPUTER
12
IN-STORE
COMPUTER

FIG. 4