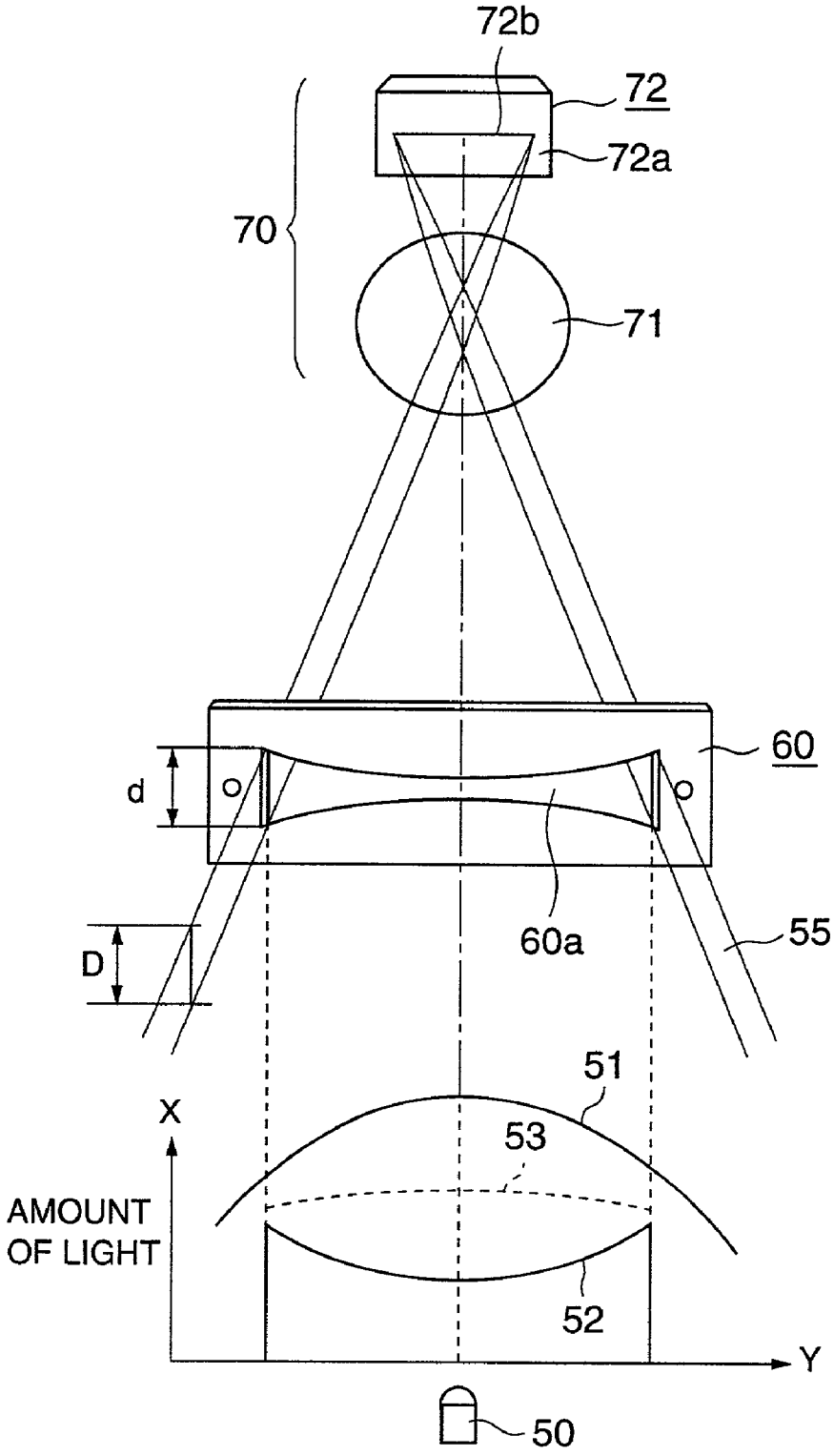FIG.1 PRIOR ART