FIG 4

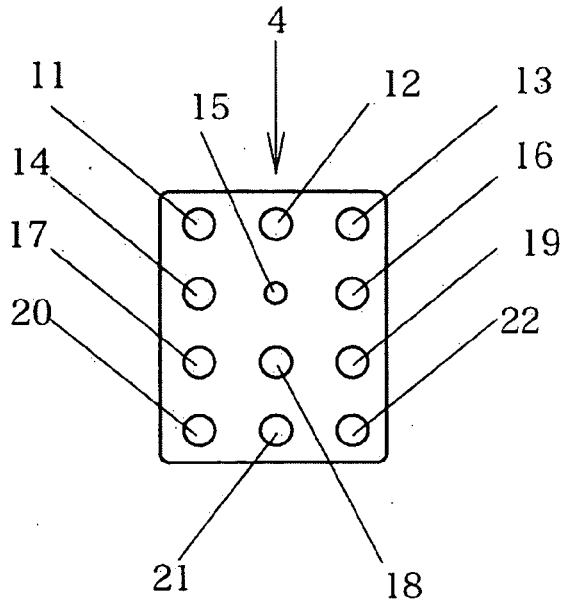

FIG 5A

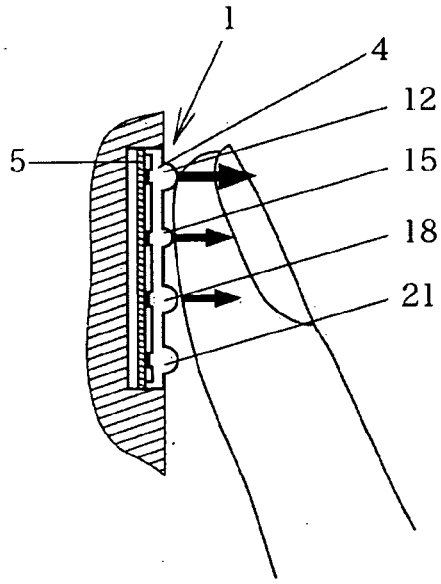

FIG 5B

1	2	3
4	5	6
7	8	9
*	0	#