FIG 10A

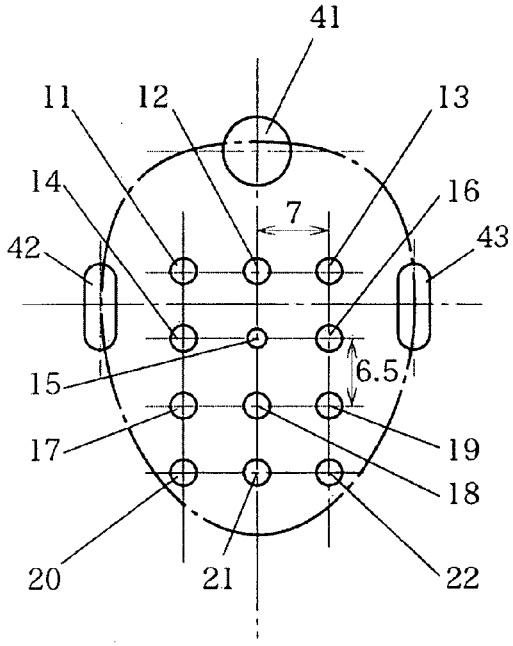


FIG 10B

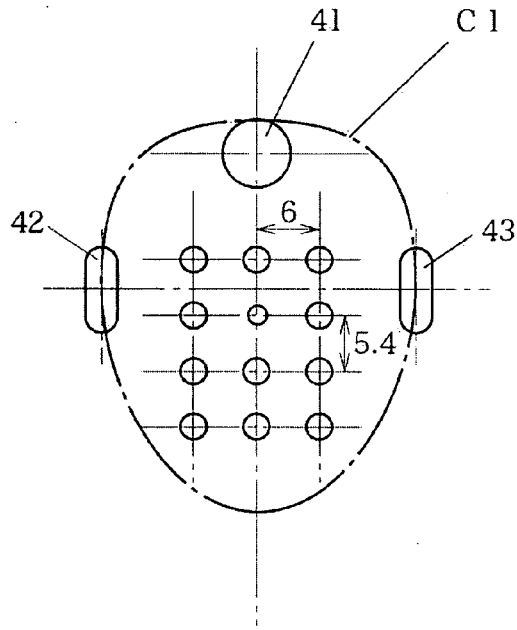


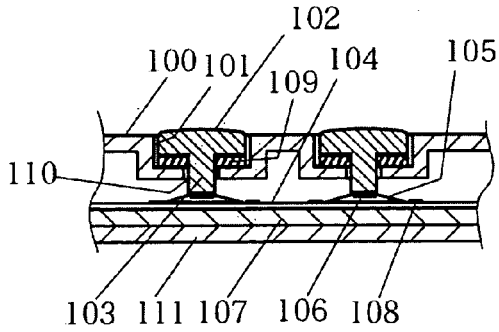


FIG 11
PRIOR ART