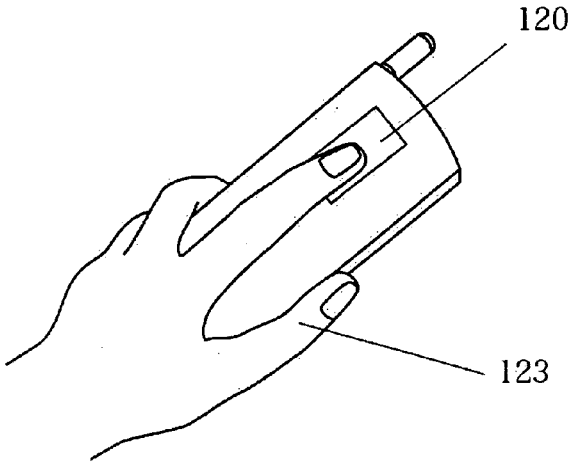

FIG 12A
PRIOR ART

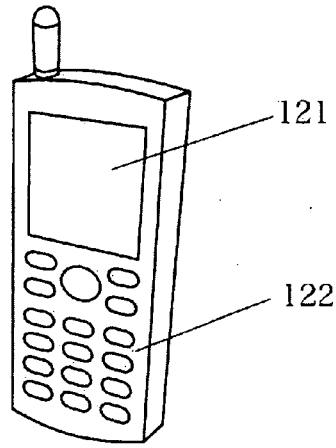

FIG 12B
PRIOR ART

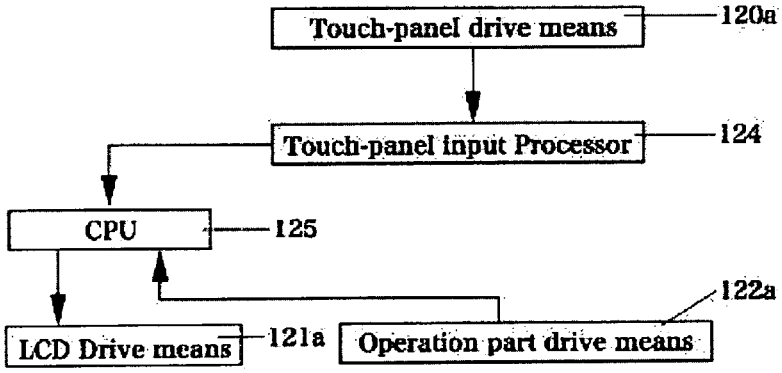

FIG 13
PRIOR ART