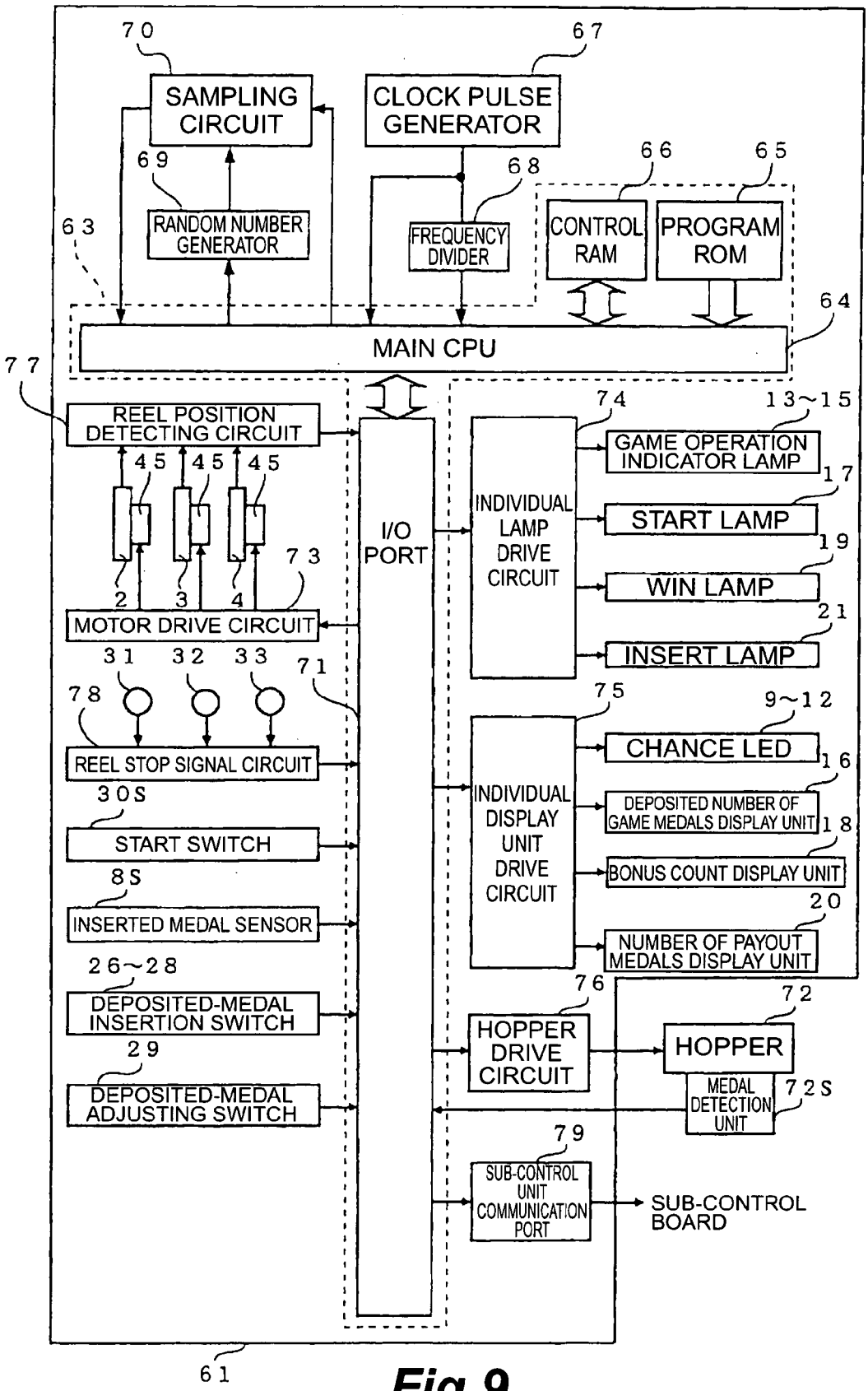
70
SAMPLING CIRCUIT
67
CLOCK PULSE GENERATOR
69
RANDOM NUMBER GENERATOR
68
FREQUENCY DIVIDER
66
CONTROL RAM
65
PROGRAM ROM
63
64
MAIN CPU
77
REEL POSITION DETECTING CIRCUIT
45
45
45
2
3
4
73
MOTOR DRIVE CIRCUIT
31
32
33
78
71
REEL STOP SIGNAL CIRCUIT
30S
START SWITCH
8S
INSERTED MEDAL SENSOR
26~28
DEPOSITED-MEDAL INSERTION SWITCH
29
DEPOSITED-MEDAL ADJUSTING SWITCH
I/O PORT
74
INDIVIDUAL LAMP DRIVE CIRCUIT
13~15
GAME OPERATION INDICATOR LAMP
17
START LAMP
19
WIN LAMP
21
INSERT LAMP
75
INDIVIDUAL DISPLAY UNIT DRIVE CIRCUIT
9~12
CHANCE LED
16
DEPOSITED NUMBER OF GAME MEDALS DISPLAY UNIT
18
BONUS COUNT DISPLAY UNIT
20
NUMBER OF PAYOUT MEDALS DISPLAY UNIT
76
HOPPER DRIVE CIRCUIT
72
HOPPER
MEDAL DETECTION UNIT
72S
79
SUB-CONTROL UNIT COMMUNICATION PORT
SUB-CONTROL BOARD
61

Fig.9