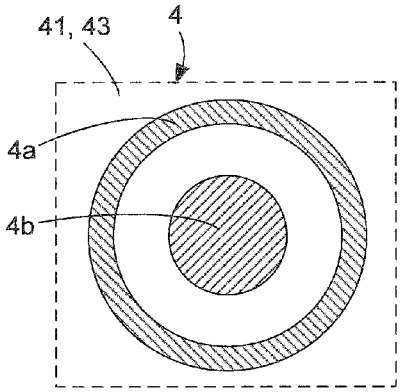

Fig 4 (Prior art)

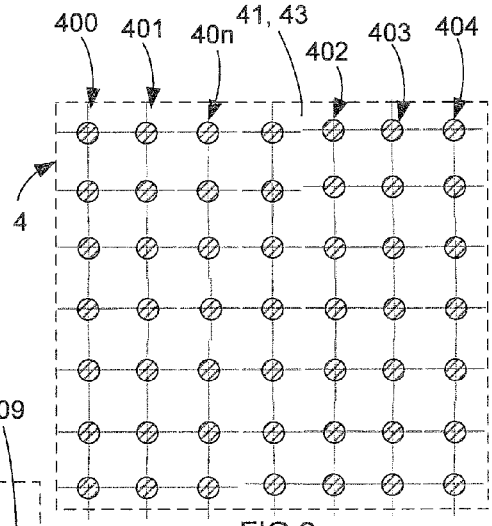

FIG 6

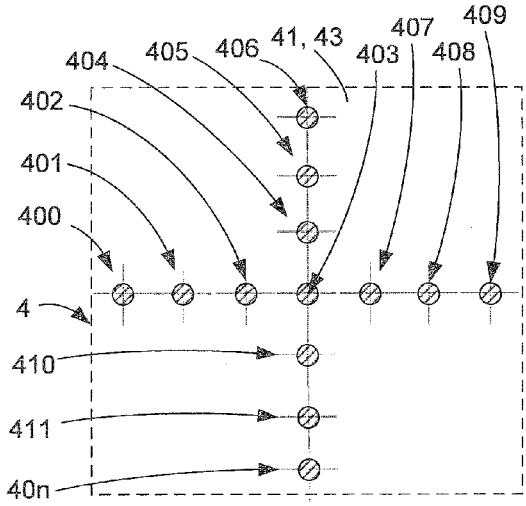

FIG 6A

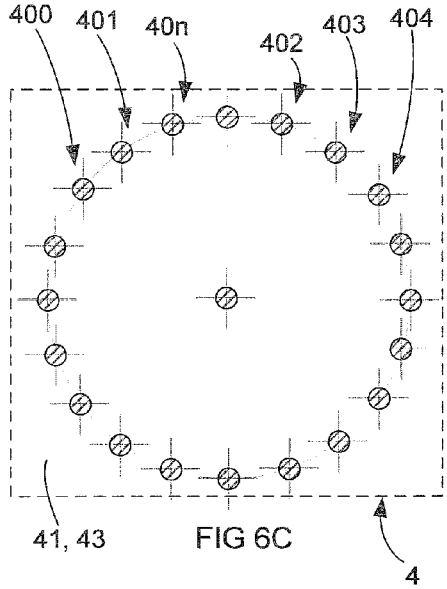

FIG 6C

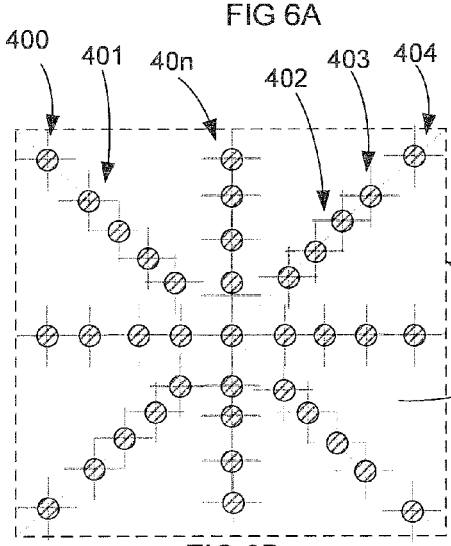

FIG 6B

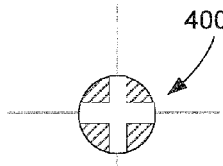

FIG 6D