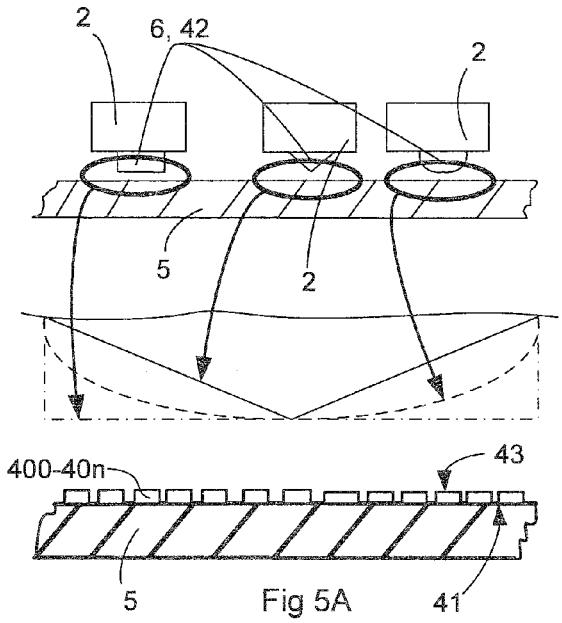

Fig 5A

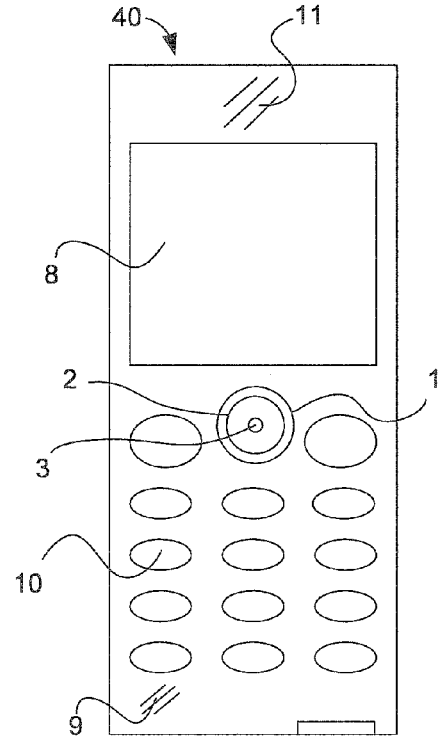

Fig 5

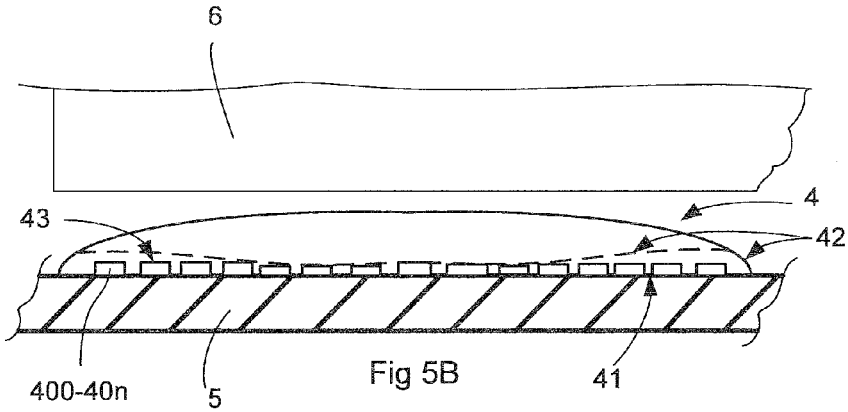

Fig 5B