US 20170033268A1

(19) United States

(12) Patent Application Publication

LEE et al.

(10) Pub. No.: US 2017/0033268 A1

(43) Pub. Date: Feb. 2, 2017

(54) LIGHT-EMITTING DIODE (LED) PACKAGE

(71) Applicant: **SAMSUNG ELECTRONICS CO., LTD.**, Suwon-si (KR)

(72) Inventors: **Dong-kuk LEE**, Suwon-si (KR); **Si-han KIM**, Seoul (KR); **Hyung-kun KIM**, Suwon-si (KR); **Yong-min KWON**, Seoul (KR); **Geun-woo KO**, Suwon-si (KR)

(73) Assignee: **SAMSUNG ELECTRONICS CO., LTD.**, Suwon-si (KR)

(21) Appl. No.: **15/162,754**

(22) Filed: **May 24, 2016**

(30) **Foreign Application Priority Data**

Jul. 30, 2015 (KR) 10-2015-0108148

Publication Classification

(51) **Int. Cl.**

H01L 33/60	(2006.01)
H01L 33/32	(2006.01)
H01L 33/56	(2006.01)
H01L 33/00	(2006.01)
H01L 33/62	(2006.01)
H01L 33/38	(2006.01)
H01L 33/06	(2006.01)
H01L 33/18	(2006.01)

(52) **U.S. Cl.**

CPC ***H01L 33/60*** (2013.01); ***H01L 33/06*** (2013.01); ***H01L 33/32*** (2013.01); ***H01L 33/18*** (2013.01); ***H01L 33/007*** (2013.01); ***H01L 33/62*** (2013.01); ***H01L 33/382*** (2013.01); ***H01L 33/56*** (2013.01); *H01L 2933/0016* (2013.01); *H01L 2933/005* (2013.01); *H01L 2933/0058* (2013.01)

(57) **ABSTRACT**
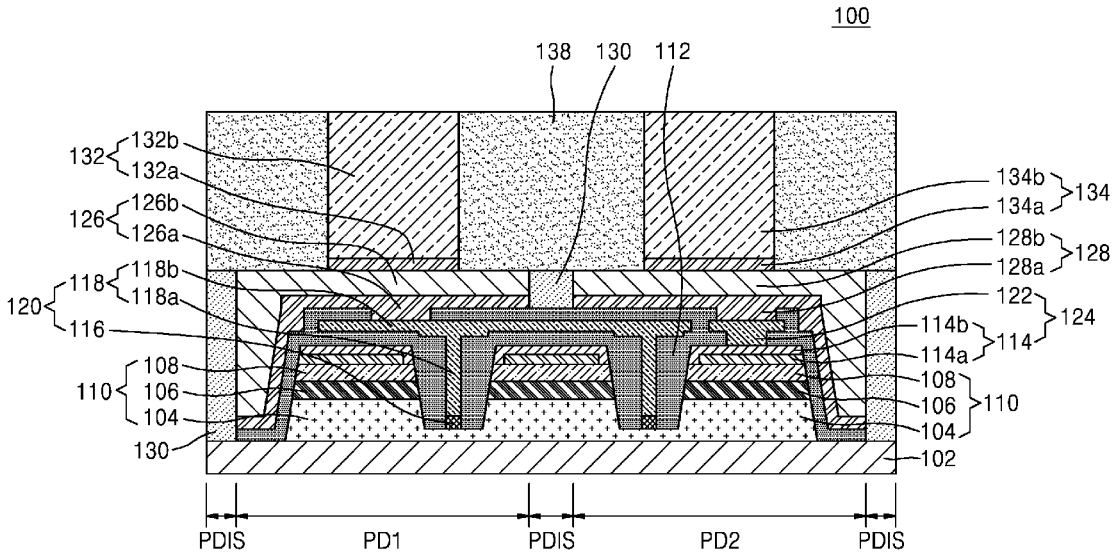
A light-emitting diode (LED) package includes a light-emitting structure including a first conductive-type semiconductor layer, an active layer, and a second conductive-type semiconductor layer; an isolating insulation layer; a first connection electrode portion and a second connection electrode portion electrically connected to the first conductive-type semiconductor layer and the second conductive-type semiconductor layer, respectively; a first electrode pad and a second electrode pad electrically connected to the first connection electrode portion and the second connection electrode portion, respectively; a first molding resin layer provided between the first electrode pad and the second electrode pad; a first pillar electrode and a second pillar electrode electrically connected to the first electrode pad and the second electrode pad, respectively; and a second molding resin layer provided on the first molding resin layer, the first electrode pad, and the second electrode pad, and between the first pillar electrode and the second pillar electrode.