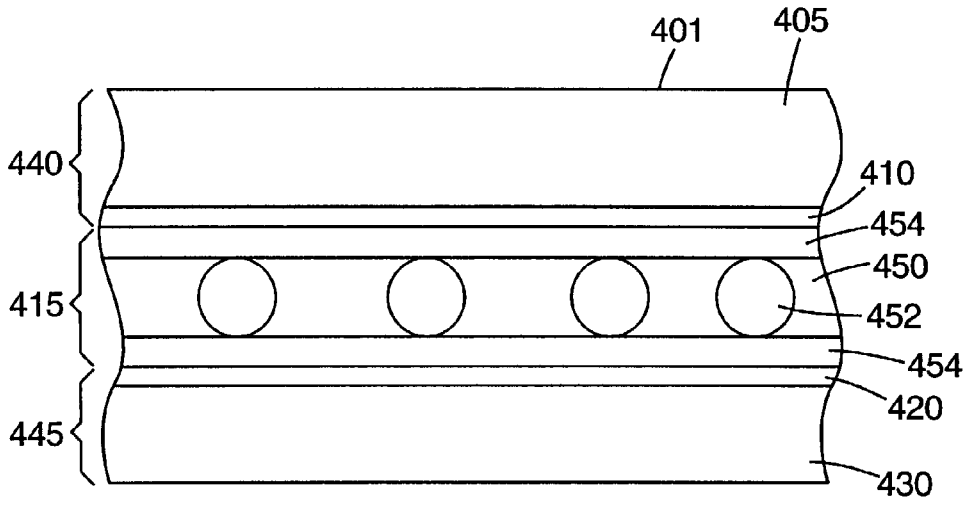
401
405
440
410
454
450
415
452
454
420
445
430

*Fig. 4D*

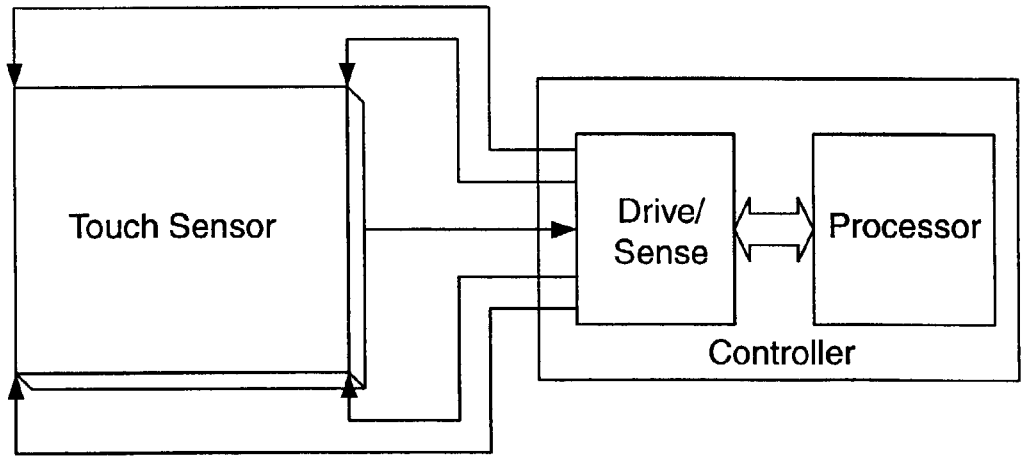
Touch Sensor
Drive/
Sense
Processor
Controller

*Fig. 5*