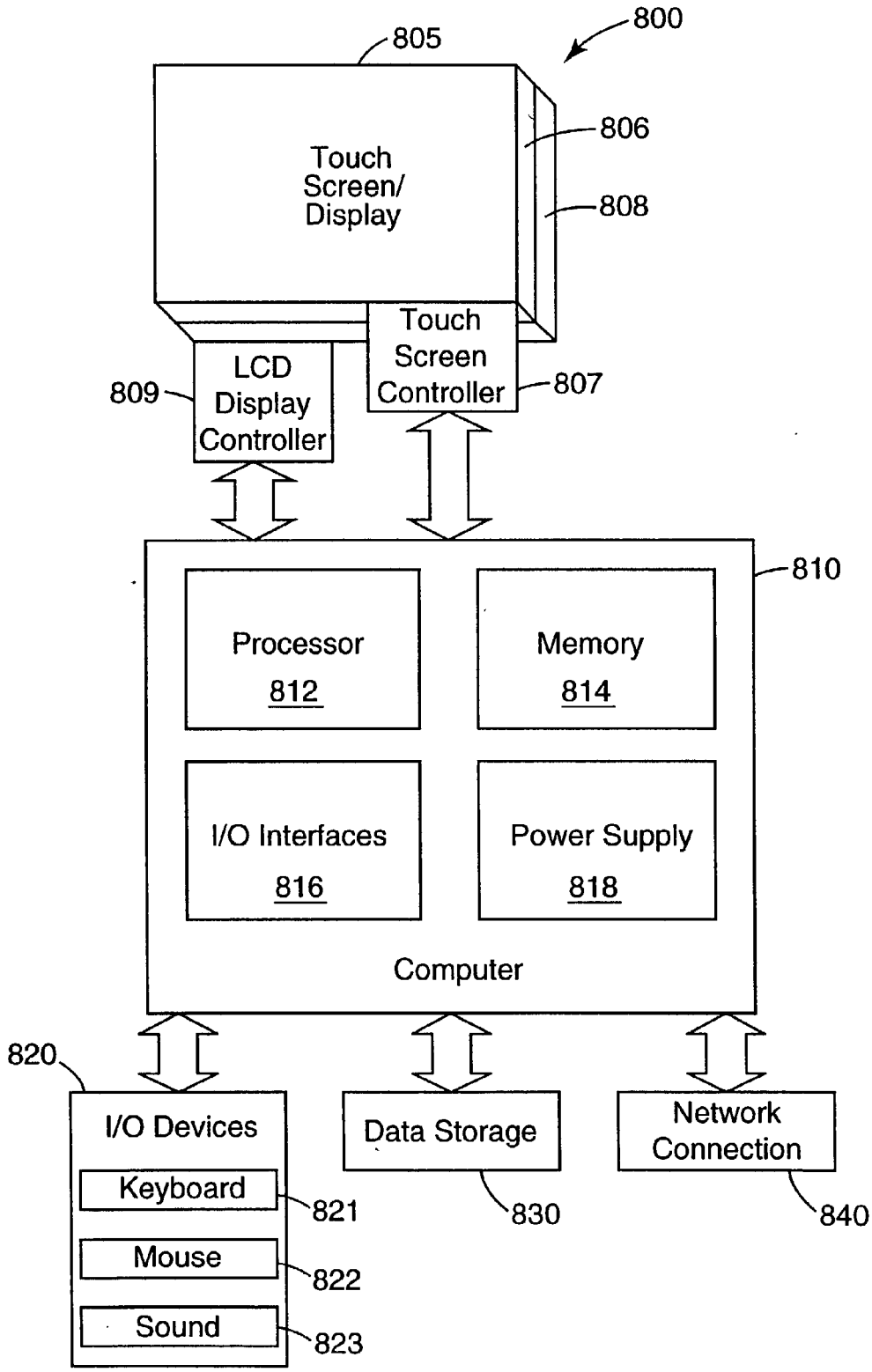
800
805
806
808
Touch Screen/ Display
Touch Screen Controller
807
LCD Display Controller
809
810
Processor
812
Memory
814
I/O Interfaces
816
Power Supply
818
Computer
820
I/O Devices
Keyboard
821
Mouse
822
Sound
823
Data Storage
830
Network Connection
840

Fig. 8