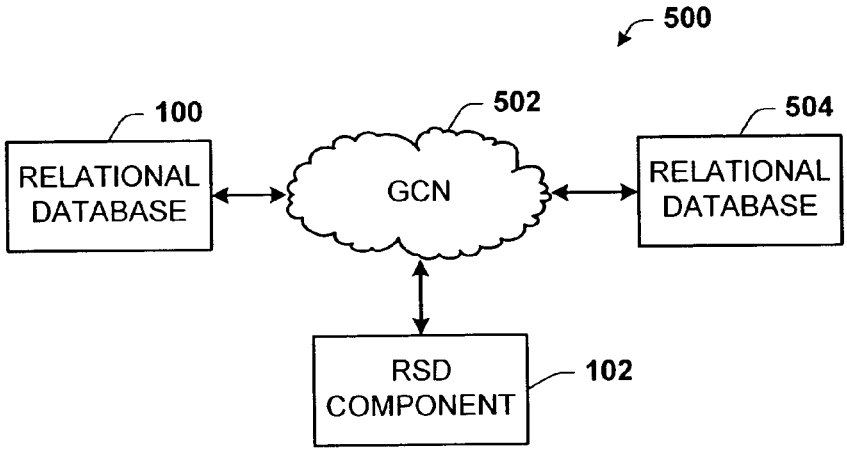
500
100
RELATIONAL DATABASE
502
GCN
504
RELATIONAL DATABASE
RSD COMPONENT
102

FIG. 5

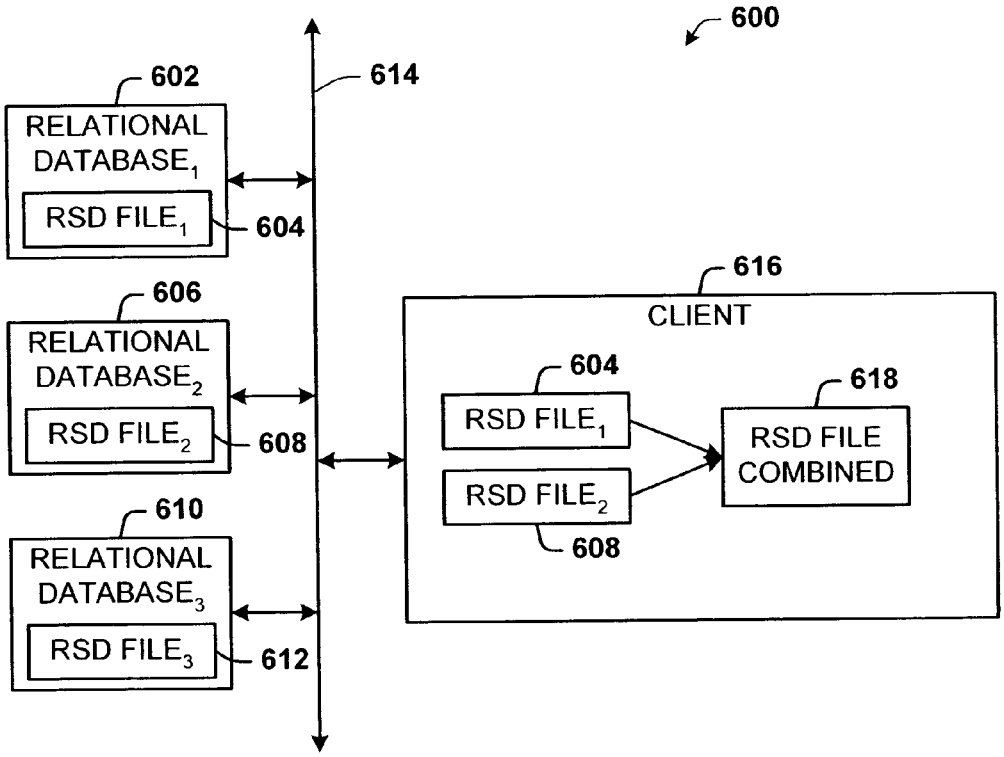
600
602
RELATIONAL DATABASE1
RSD FILE1
604
614
606
RELATIONAL DATABASE2
RSD FILE2
608
610
RELATIONAL DATABASE3
RSD FILE3
612
616
CLIENT
604
RSD FILE1
RSD FILE2
608
618
RSD FILE COMBINED

FIG. 6