FIG. 11

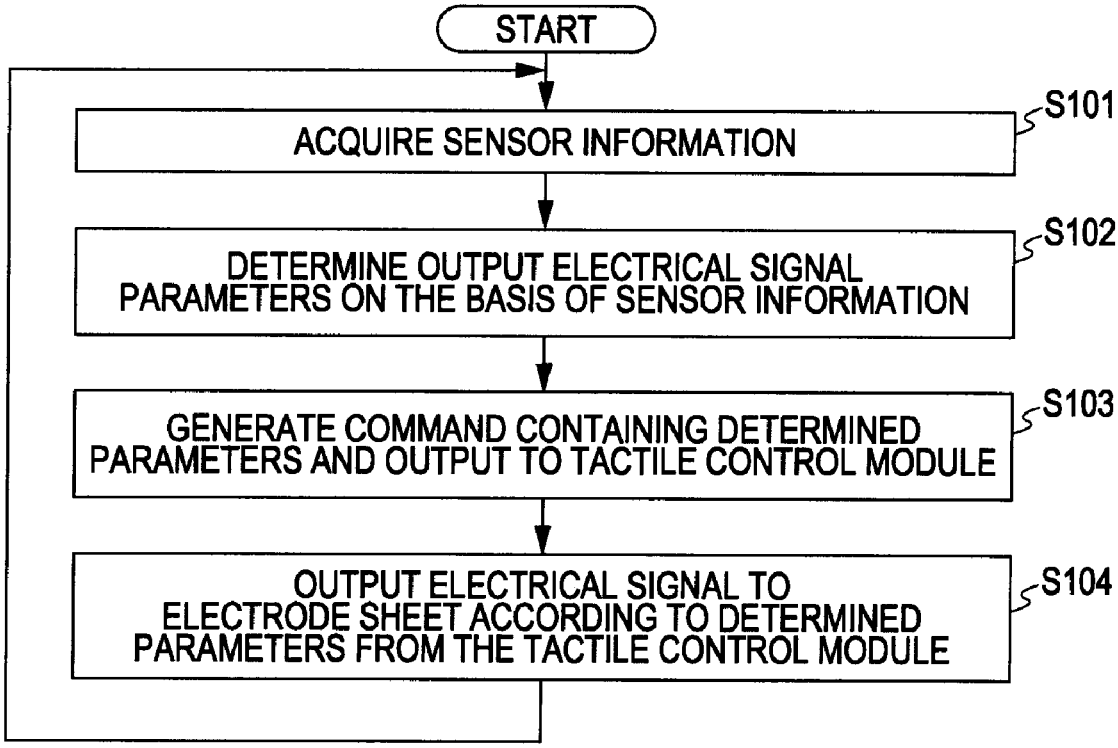
START
ACQUIRE SENSOR INFORMATION
S101
DETERMINE OUTPUT ELECTRICAL SIGNAL PARAMETERS ON THE BASIS OF SENSOR INFORMATION
S102
GENERATE COMMAND CONTAINING DETERMINED PARAMETERS AND OUTPUT TO TACTILE CONTROL MODULE
S103
OUTPUT ELECTRICAL SIGNAL TO ELECTRODE SHEET ACCORDING TO DETERMINED PARAMETERS FROM THE TACTILE CONTROL MODULE
S104