US 20170221969A1

(19) United States

(12) Patent Application Publication

Steckel et al.

(10) Pub. No.: US 2017/0221969 A1

(43) Pub. Date: Aug. 3, 2017

(54) **QUANTUM DOT LED AND OLED INTEGRATION FOR HIGH EFFICIENCY DISPLAYS**

(71) Applicant: **Apple Inc.**, Cupertino, CA (US)

(72) Inventors: **Jonathan S. Steckel**, Cupertino, CA (US); **Mathew K. Mathai**, San Jose, CA (US); **Paul S. Drzaic**, Morgan Hill, CA (US); **Hitoshi Yamamoto**, Palo Alto, CA (US)

(21) Appl. No.: **15/244,906**

(22) Filed: **Aug. 23, 2016**

Related U.S. Application Data

(60) Provisional application No. 62/290,423, filed on Feb. 2, 2016.

Publication Classification

(51) **Int. Cl.**

H01L 27/32	(2006.01)
H01L 51/00	(2006.01)
H01L 51/50	(2006.01)

(52) **U.S. Cl.**

CPC ***H01L 27/322*** (2013.01); ***H01L 51/5016*** (2013.01); ***H01L 51/5072*** (2013.01); ***H01L 51/502*** (2013.01); ***H01L 51/0013*** (2013.01); ***H01L 51/0003*** (2013.01); ***H01L 27/3218*** (2013.01); ***H01L 27/3209*** (2013.01); *H01L 2251/5369* (2013.01)

(57) **ABSTRACT**
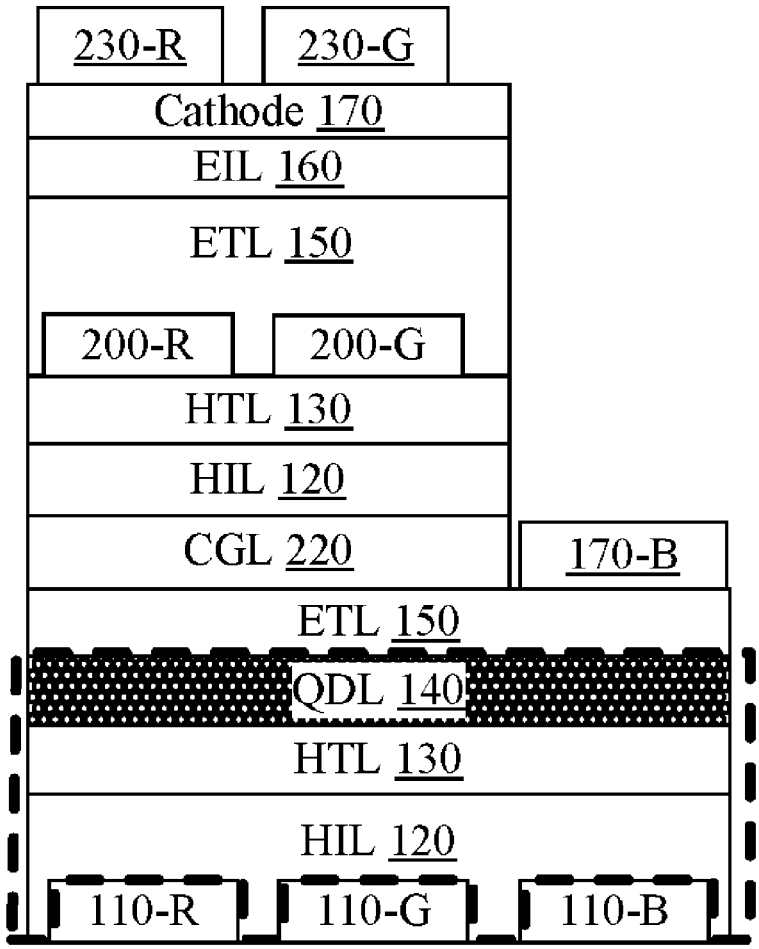
Displays including hybrid pixels including an OLED subpixel and QD-LED subpixel are described. In an embodiment, OLED and QD-LED stacks are integrated into the same pixel with multiple common layers shared by the OLED and QD-LED stacks.