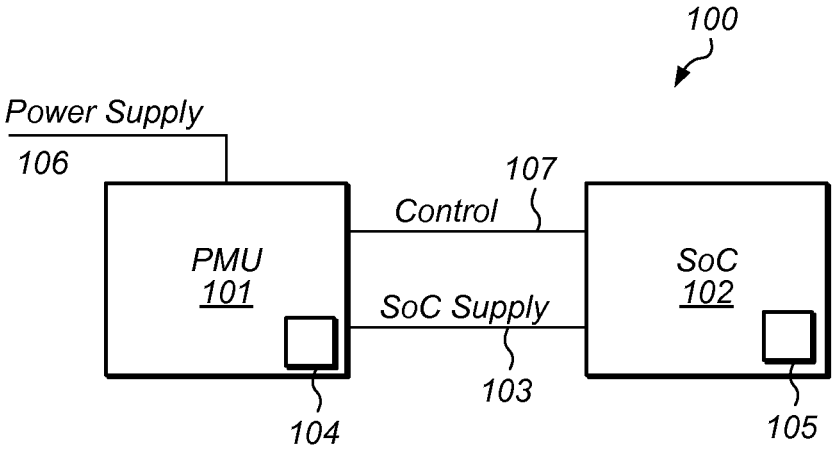
100
Power Supply
106
107
Control
PMU
101
SoC
102
SoC Supply
103
104
105

FIG. 1