FIG. 5

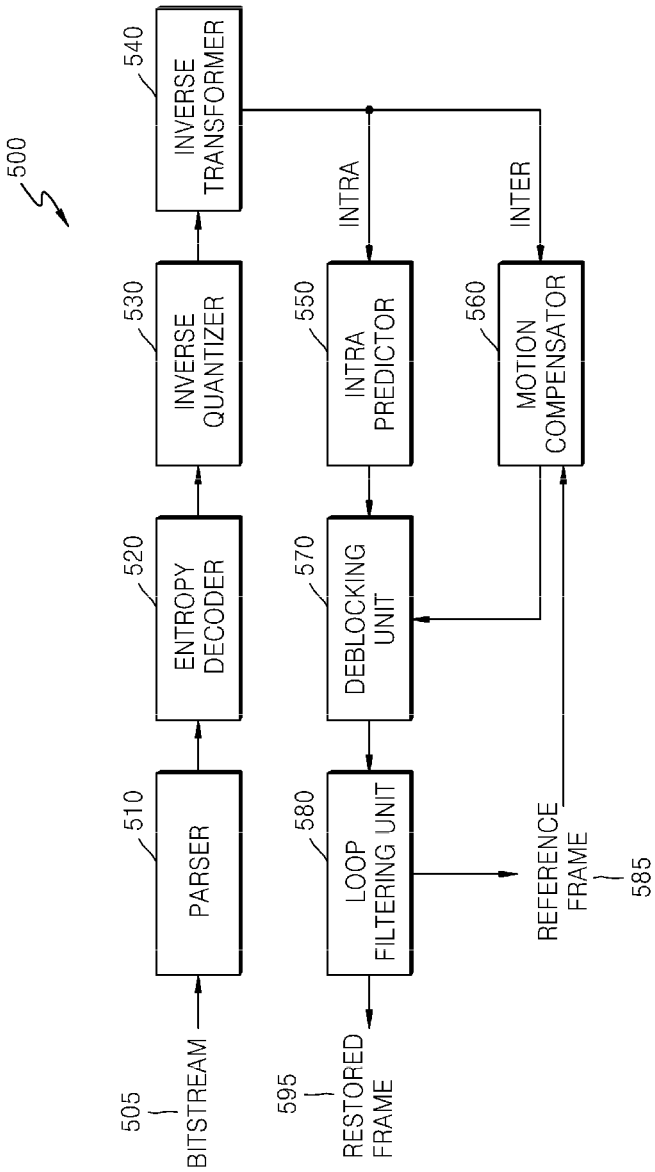
500
505
BITSTREAM
510
PARSER
520
ENTROPY DECODER
530
INVERSE QUANTIZER
540
INVERSE TRANSFORMER
INTRA
INTER
550
INTRA PREDICTOR
560
MOTION COMPENSATOR
570
DEBLOCKING UNIT
580
LOOP FILTERING UNIT
595
RESTORED FRAME
REFERENCE FRAME
585