US 20020049070A1

(19) United States

(12) Patent Application Publication

(10) Pub. No.: US 2002/0049070 A1

(43) Pub. Date: Apr. 25, 2002

Bick

(54) USER INTERFACE DEVICE

(75) Inventor: **Andrew Raymond Bick**, Surrey (GB)

Correspondence Address:
WARE FRESSOLA VAN DER SLUYS & ADOLPHSON, LLP
BRADFORD GREEN BUILDING 5
755 MAIN STREET, P O BOX 224
MONROE, CT 06468 (US)

(73) Assignee: **Nokia Mobile Phones Ltd.**

(21) Appl. No.: **09/942,373**

(22) Filed: **Aug. 29, 2001**

(30) **Foreign Application Priority Data**

Oct. 3, 2000 (GB) ..... 0024204.0

**Publication Classification**

(51) **Int. Cl.**[7] ..... **H04M 1/00**

(52) **U.S. Cl.** ..... **455/550**; 455/566

(57) **ABSTRACT**
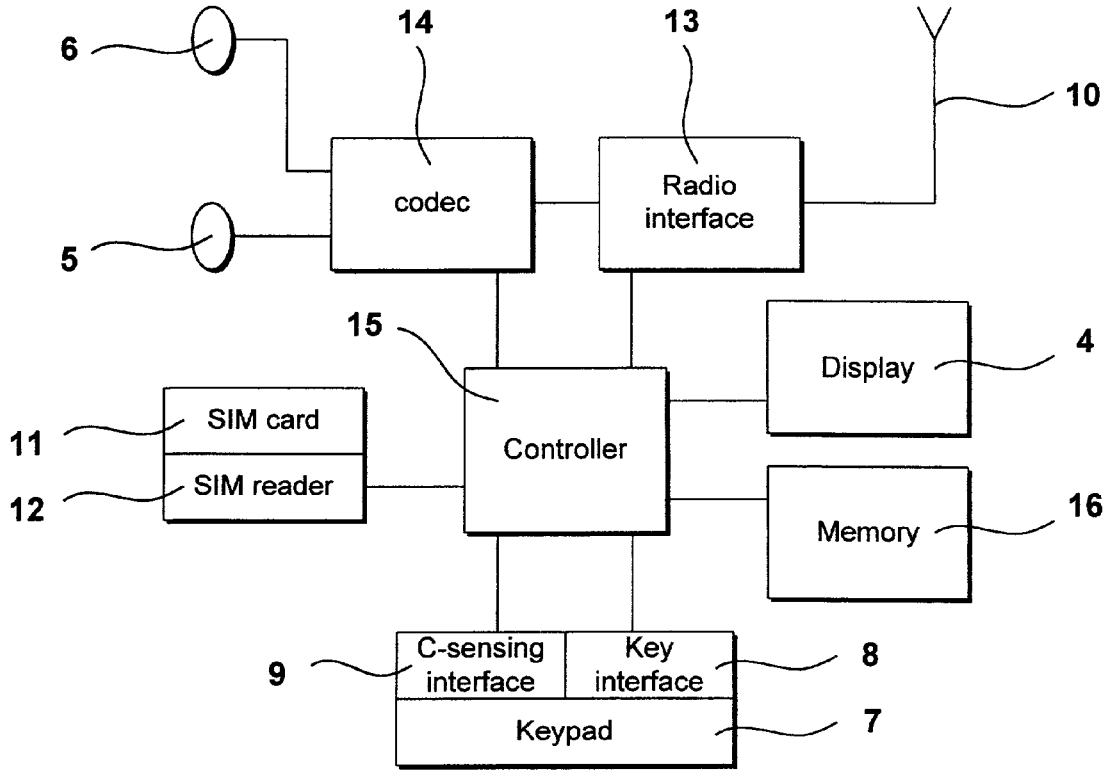
A keypad (**7**) of a mobile telephone handset comprises a keymat (**17**) beneath which are disposed capacitive sensing plates (**20, 21**). The keypad may be used in a conventional manner to enter alphanumeric data by pressing keys (**18**) or as a touch pad by sliding a finger over the surface of the keymat (**17**).