US 20140369170A1

(19) United States

(12) Patent Application Publication

Inha et al.

(10) Pub. No.: US 2014/0369170 A1

(43) Pub. Date: Dec. 18, 2014

(54) NEAR FIELD COMMUNICATION APPARATUS

(75) Inventors: **Kai Inha**, Jarvenpaa (FI); **Juha Backman**, Espoo (FI)

(73) Assignee: **Nokia Corporation**, Espoo (FI)

(21) Appl. No.: **14/344,902**

(22) PCT Filed: **Sep. 16, 2011**

(86) PCT No.: **PCT/IB2011/054067**

§ 371 (c)(1), (2), (4) Date: **Mar. 13, 2014**

Publication Classification

(51) **Int. Cl.**
H04B 11/00 (2006.01)

(52) **U.S. Cl.**
CPC *H04B 11/00* (2013.01)
USPC **367/140**

(57) **ABSTRACT**
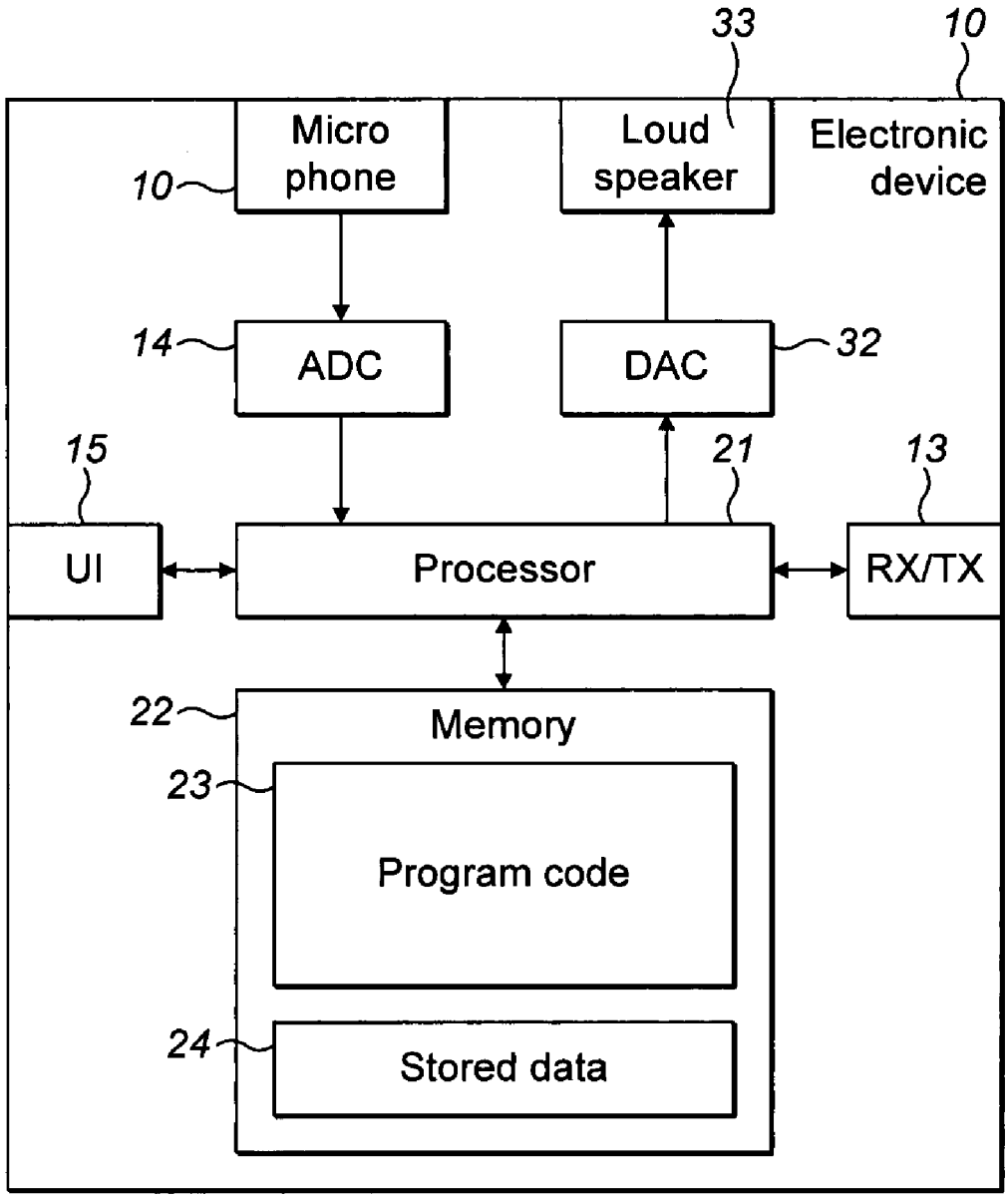
An apparatus comprising: a transducer suitable for generating an acoustic sound pressure wave being configured to: magnetically couple the apparatus to a further apparatus transducer for transferring data.