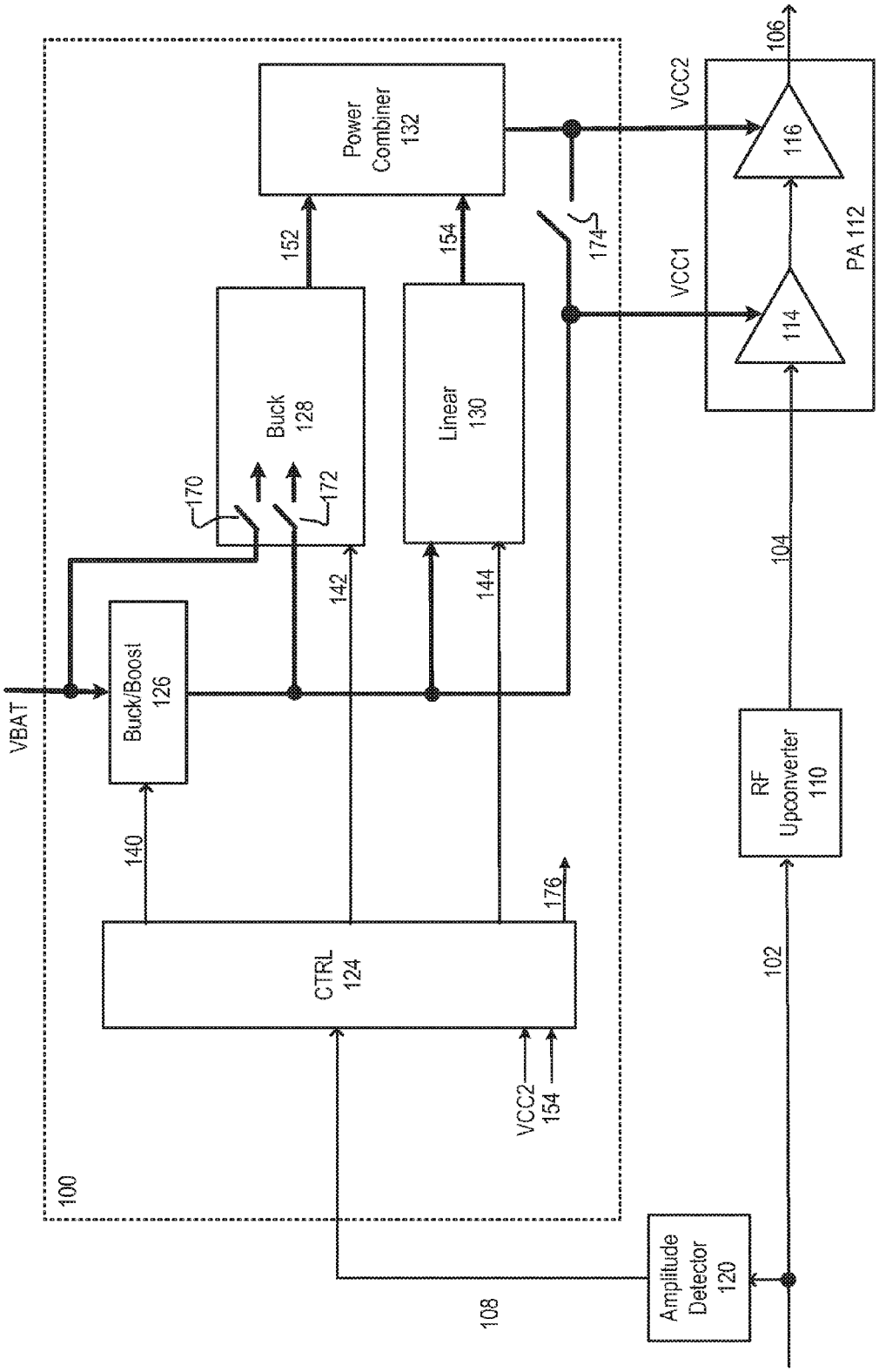
100
VBAT
Buck/Boost
126
140
CTRL
124
VCC2
154
176
142
144
Buck
128
170
172
Linear
130
152
154
Power
Combiner
132
174
VCC1
VCC2
114
116
PA 112
106
104
RF
Upconverter
110
102
Amplitude
Detector
120
108

FIG. 1