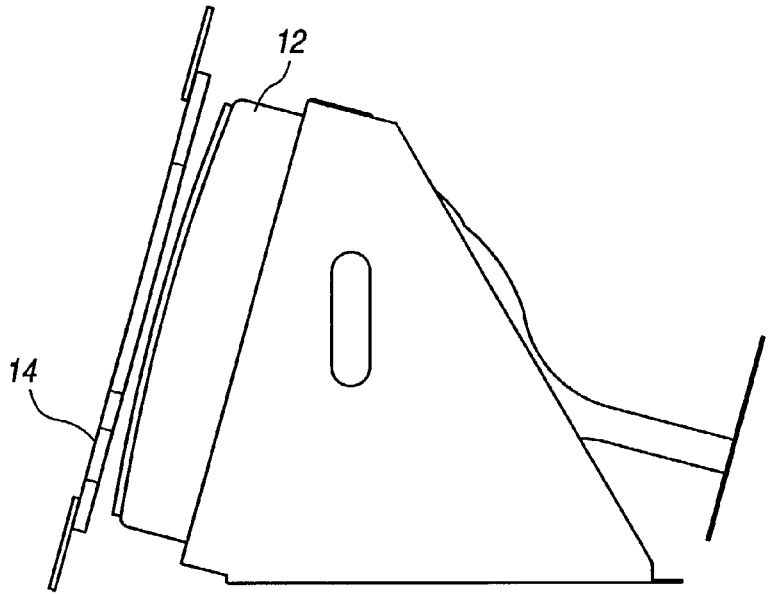
12
14

FIG. 2

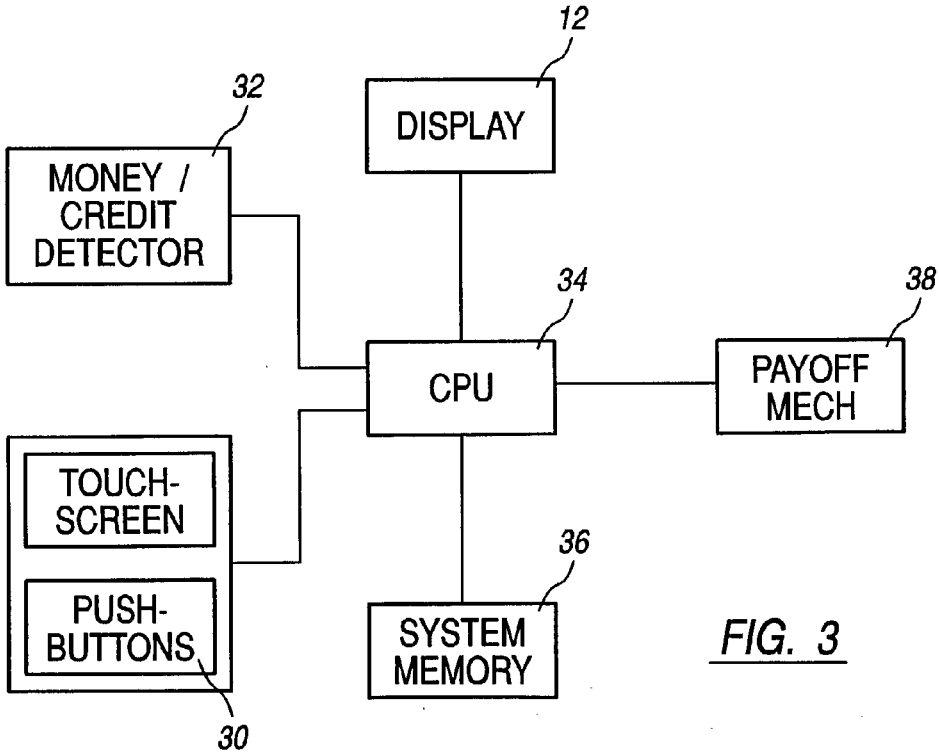
12
DISPLAY
32
MONEY / CREDIT DETECTOR
34
CPU
38
PAYOFF MECH
TOUCH-SCREEN
PUSH-BUTTONS
30
36
SYSTEM MEMORY

FIG. 3