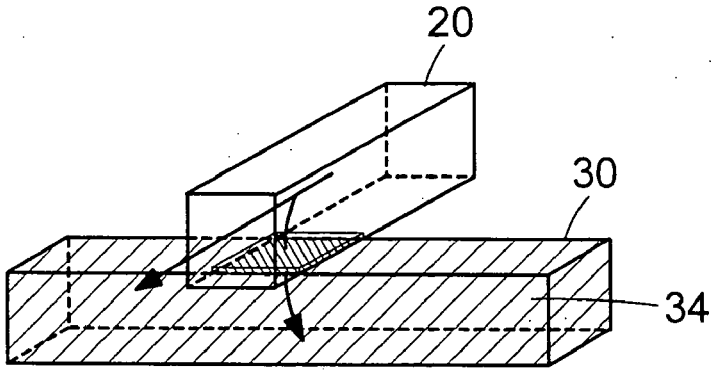
20
30
34

FIG. 12

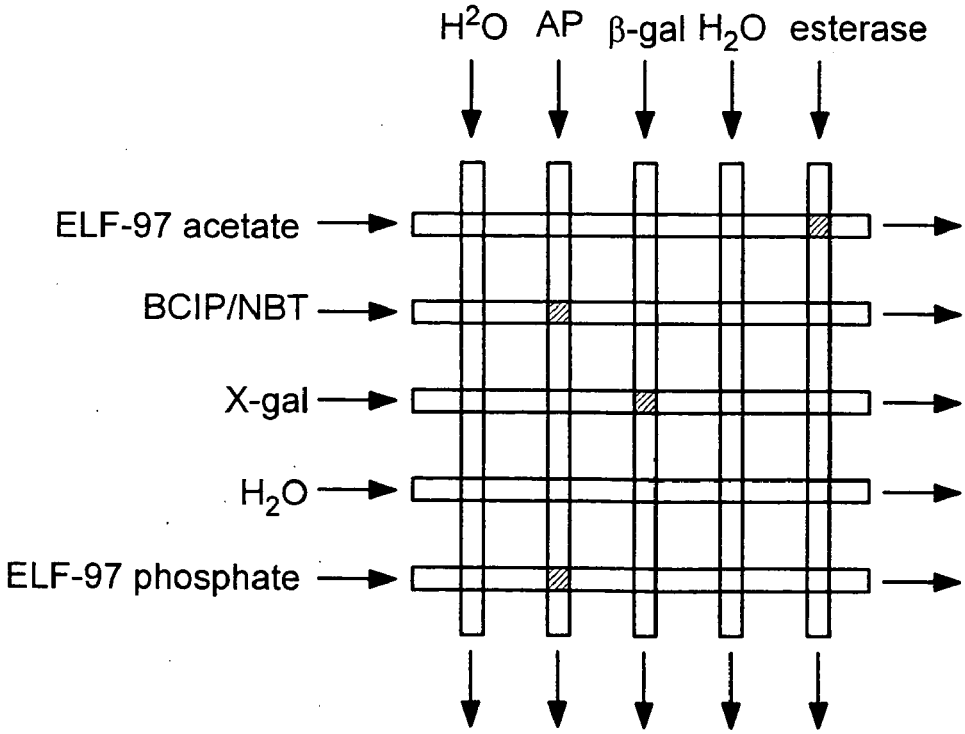
H2O
AP
β-gal
H2O
esterase
ELF-97 acetate
BCIP/NBT
X-gal
H2O
ELF-97 phosphate

FIG. 13