FIG.7A WHEN LIQUID CRYSTAL EXISTING AT SYMBOL DISPLAY AREAS IS NOT DRIVEN

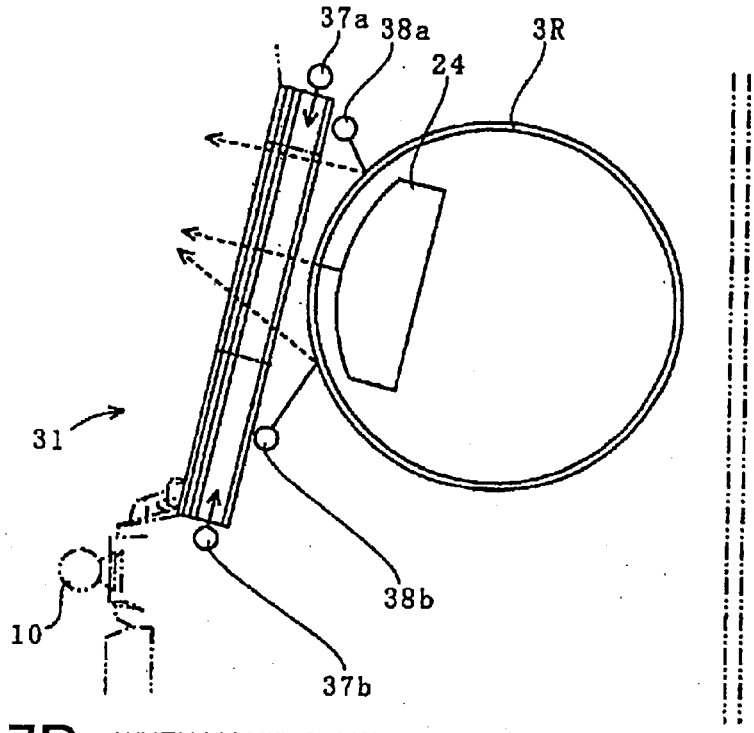
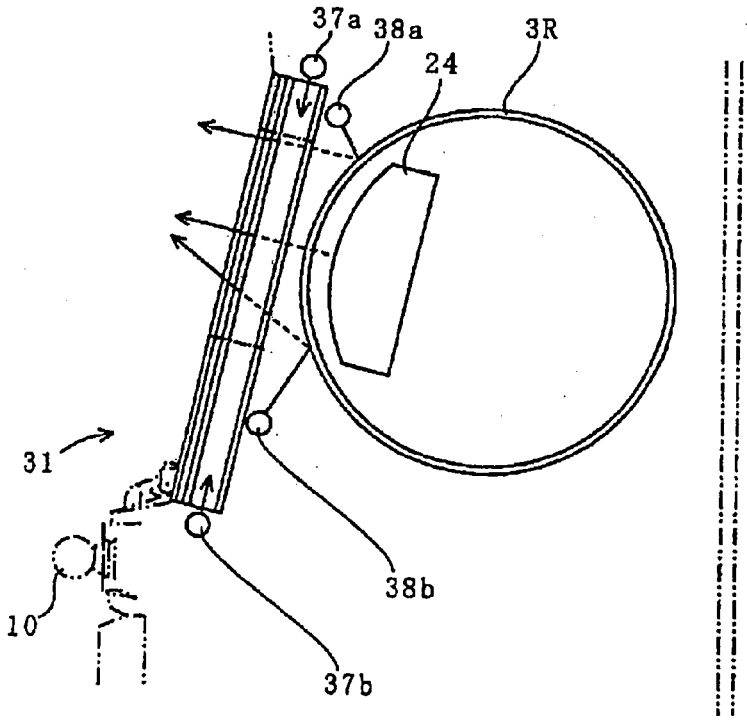
FIG.7B WHEN LIQUID CRYSTAL EXISTING AT SYMBOL DISPLAY AREAS IS DRIVEN