FIG.8

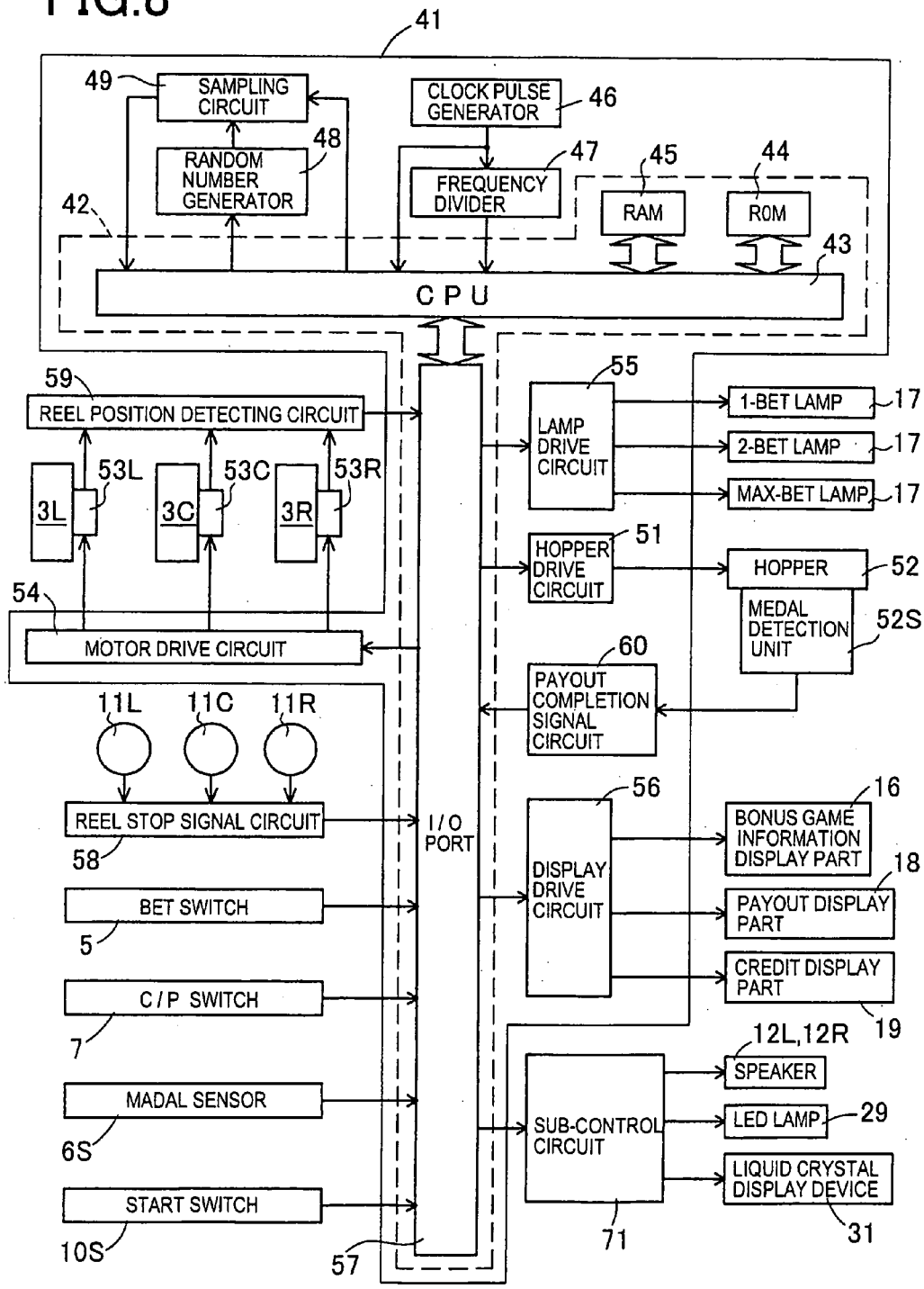
41
49
SAMPLING CIRCUIT
CLOCK PULSE GENERATOR
46
48
RANDOM NUMBER GENERATOR
47
45
44
FREQUENCY DIVIDER
RAM
ROM
42
43
CPU
59
REEL POSITION DETECTING CIRCUIT
55
LAMP DRIVE CIRCUIT
1-BET LAMP
17
2-BET LAMP
17
MAX-BET LAMP
17
53L
53C
53R
3L
3C
3R
HOPPER DRIVE CIRCUIT
51
HOPPER
52
MEDAL DETECTION UNIT
52S
54
MOTOR DRIVE CIRCUIT
60
PAYOUT COMPLETION SIGNAL CIRCUIT
11L
11C
11R
REEL STOP SIGNAL CIRCUIT
58
I/O PORT
56
DISPLAY DRIVE CIRCUIT
16
BONUS GAME INFORMATION DISPLAY PART
18
PAYOUT DISPLAY PART
CREDIT DISPLAY PART
19
BET SWITCH
5
C/P SWITCH
7
12L,12R
SPEAKER
MADAL SENSOR
6S
SUB-CONTROL CIRCUIT
LED LAMP
29
LIQUID CRYSTAL DISPLAY DEVICE
START SWITCH
10S
57
71
31