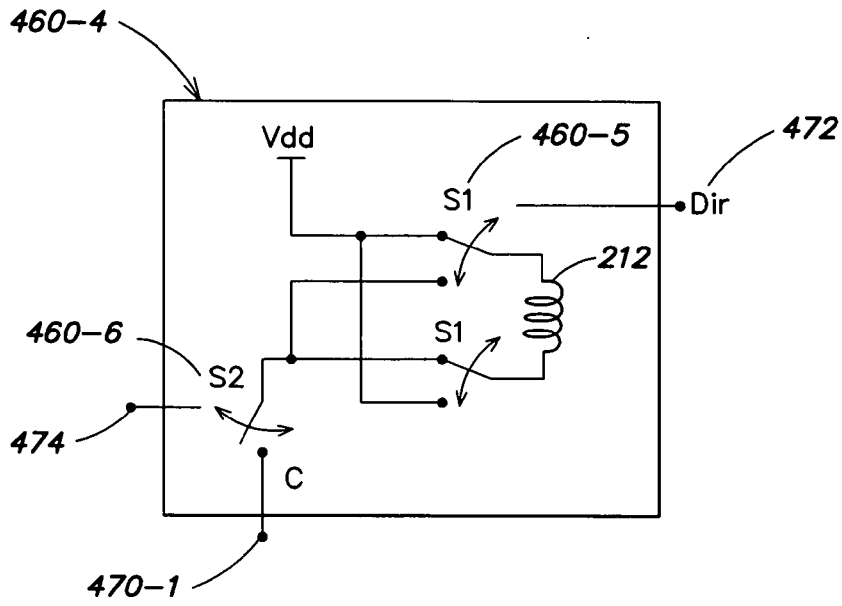
460-4
Vdd
460-5
472
S1
Dir
212
460-6
S1
S2
474
C
470-1

FIG. 15

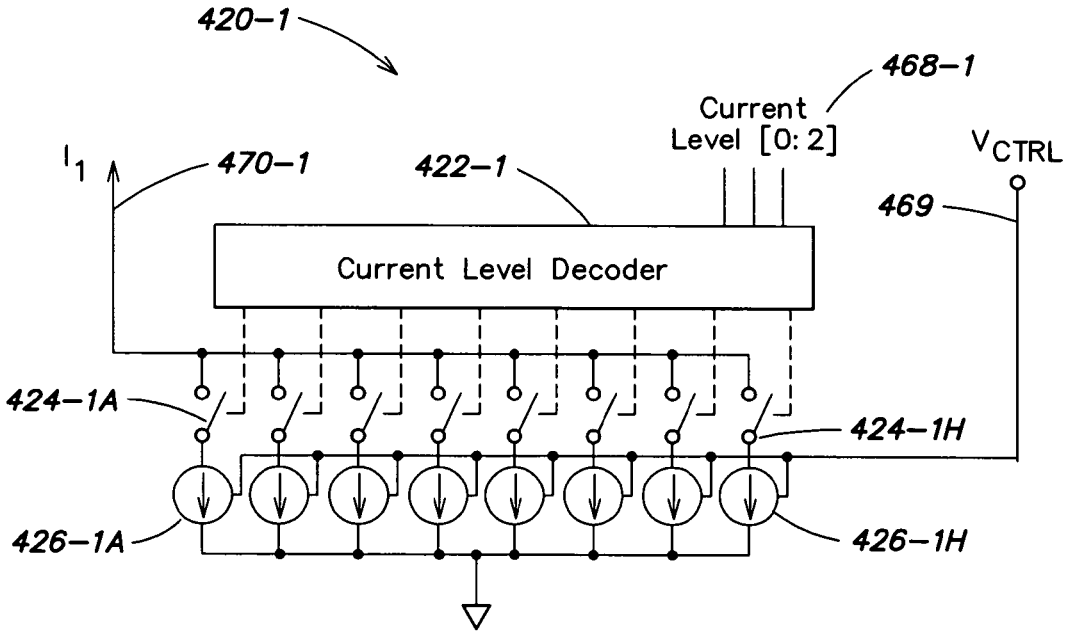
420-1
468-1
Current
Level [0: 2]
V_{CTRL}
I_1
470-1
422-1
469
Current Level Decoder
424-1A
424-1H
426-1A
426-1H

FIG. 16