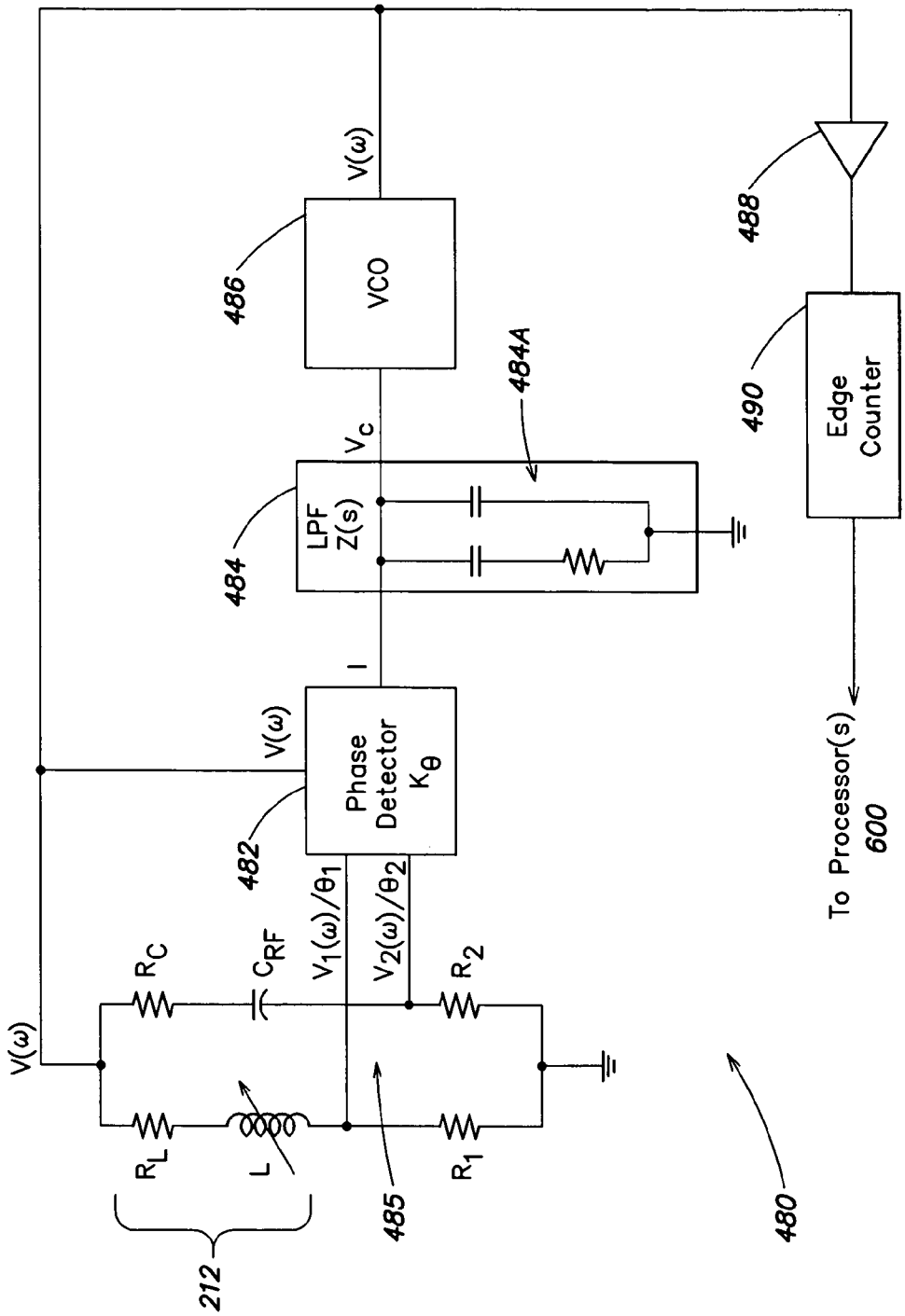
V(ω)
VCO
486
V(ω)
Vc
484A
LPF
Z(s)
484
I
Phase
Detector
Kθ
482
V(ω)
V1(ω)/θ1
V2(ω)/θ2
RC
CRF
R2
RL
L
R1
485
212
480
488
490
Edge
Counter
To Processor(s)
600

FIG. 17