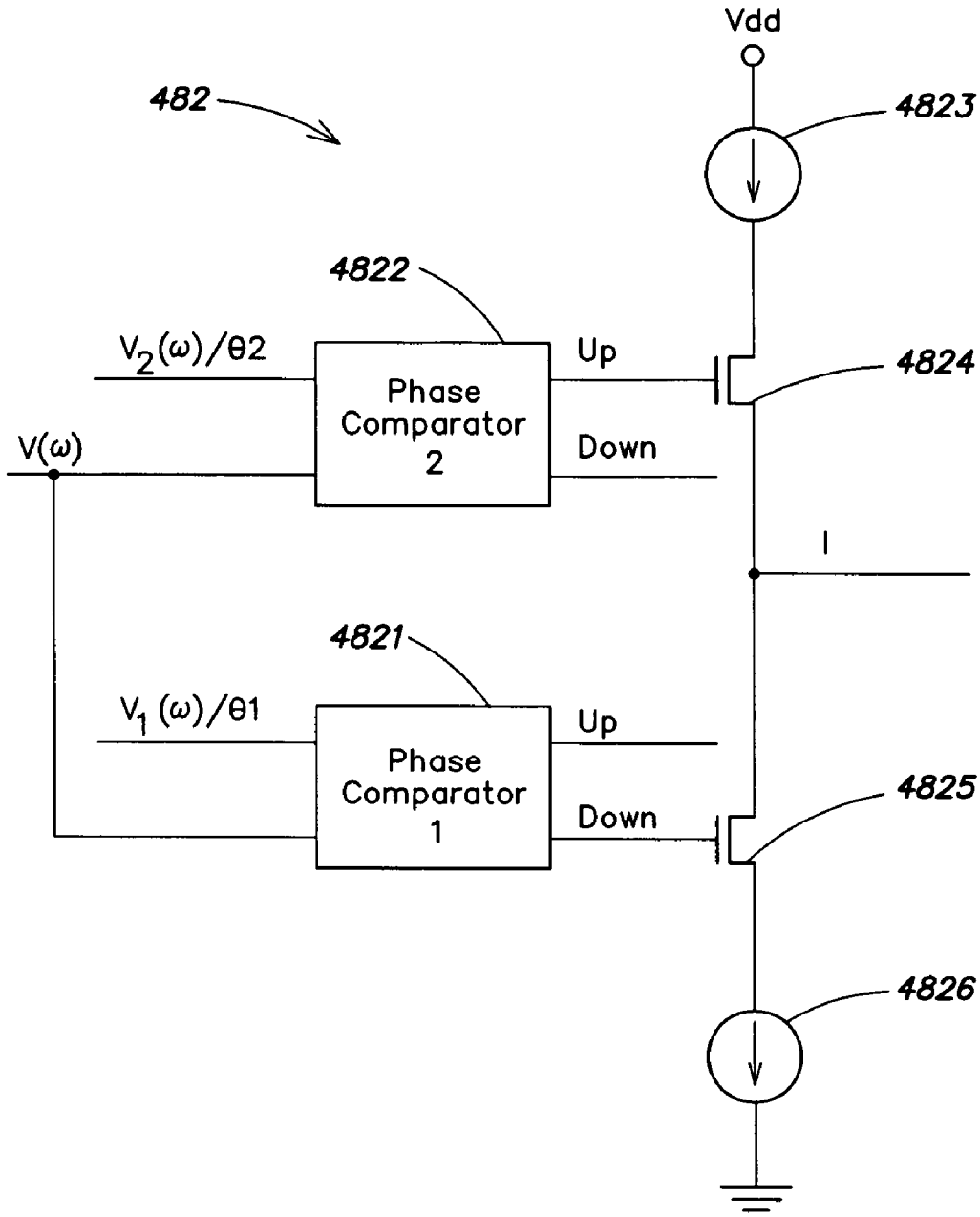
Vdd
482
4823
4822
$V_2(\omega)/\theta 2$
Up
4824
Phase Comparator 2
$V(\omega)$
Down
I
4821
$V_1(\omega)/\theta 1$
Up
Phase Comparator 1
4825
Down
4826

FIG. 18