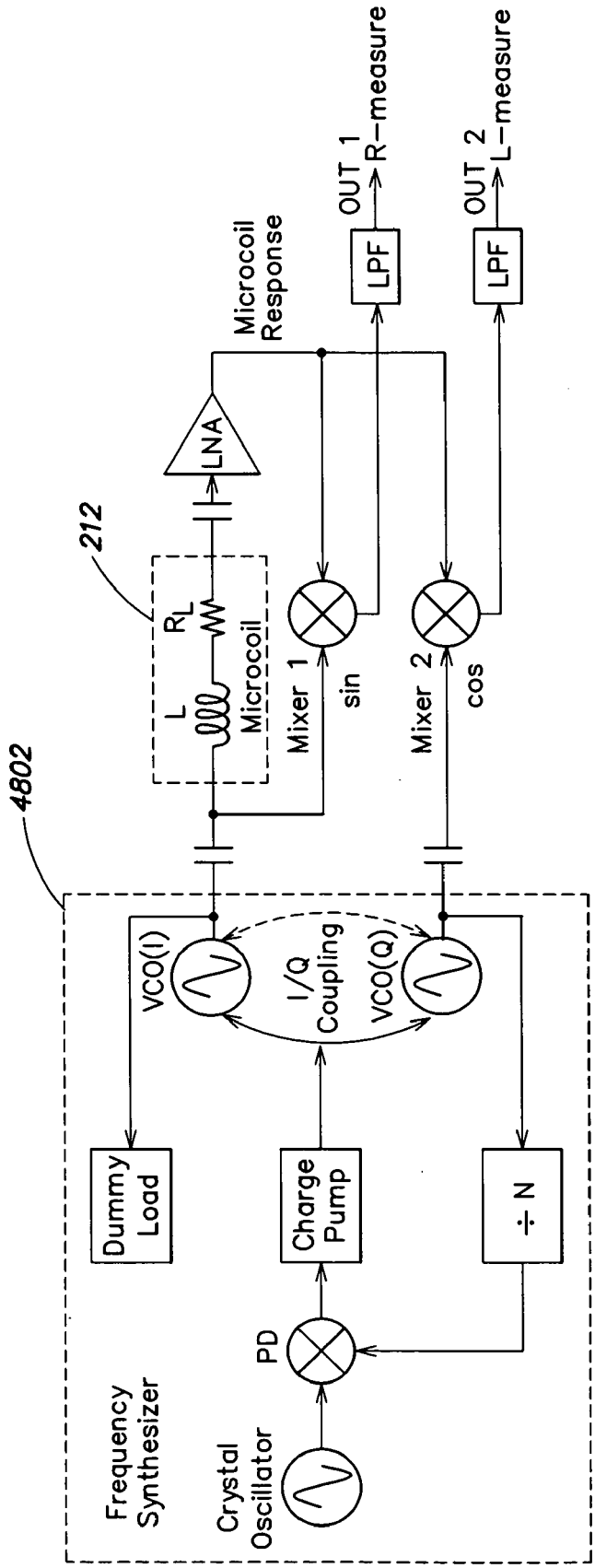
4802
212
Frequency Synthesizer
Crystal Oscillator
PD
Dummy Load
Charge Pump
÷ N
VCO(I)
I/Q Coupling
VCO(Q)
L
Microcoil
R_L
LNA
Microcoil Response
Mixer 1
sin
Mixer 2
cos
LPF
LPF
OUT 1
R-measure
OUT 2
L-measure

FIG. 20