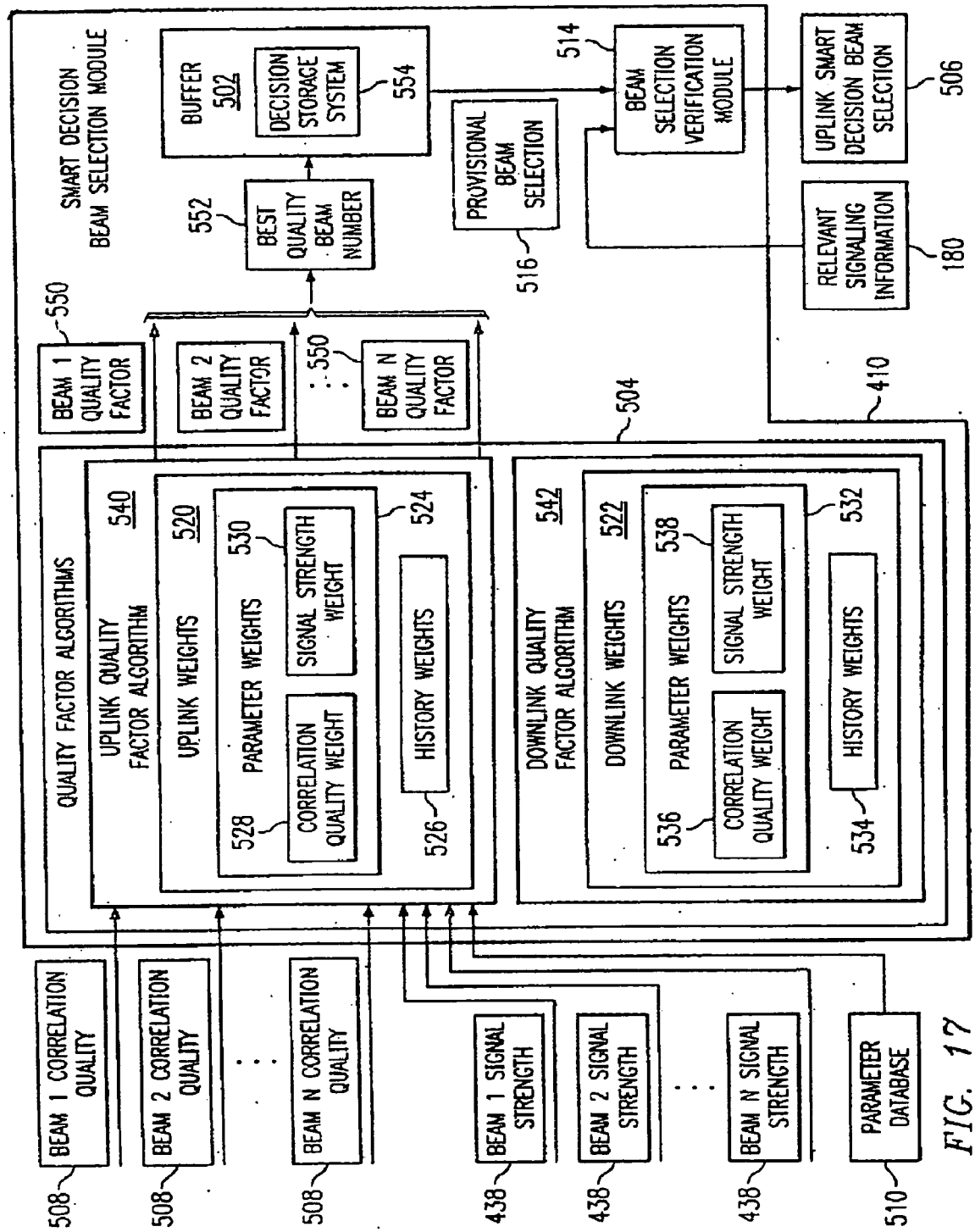
SMART DECISION BEAM SELECTION MODULE
BUFFER 502
DECISION STORAGE SYSTEM
554
514
BEAM SELECTION VERIFICATION MODULE
UPLINK SMART DECISION BEAM SELECTION
506
552
BEST QUALITY BEAM NUMBER
PROVISIONAL BEAM SELECTION
516
RELEVANT SIGNALING INFORMATION
180
550
BEAM 1 QUALITY FACTOR
BEAM 2 QUALITY FACTOR
550
BEAM N QUALITY FACTOR
504
410
QUALITY FACTOR ALGORITHMS
UPLINK QUALITY FACTOR ALGORITHM
540
UPLINK WEIGHTS
520
PARAMETER WEIGHTS
530
SIGNAL STRENGTH WEIGHT
528
CORRELATION QUALITY WEIGHT
524
HISTORY WEIGHTS
526
DOWNLINK QUALITY FACTOR ALGORITHM
542
DOWNLINK WEIGHTS
522
PARAMETER WEIGHTS
538
SIGNAL STRENGTH WEIGHT
536
CORRELATION QUALITY WEIGHT
532
HISTORY WEIGHTS
534
BEAM 1 CORRELATION QUALITY
508
BEAM 2 CORRELATION QUALITY
508
BEAM N CORRELATION QUALITY
508
BEAM 1 SIGNAL STRENGTH
438
BEAM 2 SIGNAL STRENGTH
438
BEAM N SIGNAL STRENGTH
438
PARAMETER DATABASE
510

FIG. 17