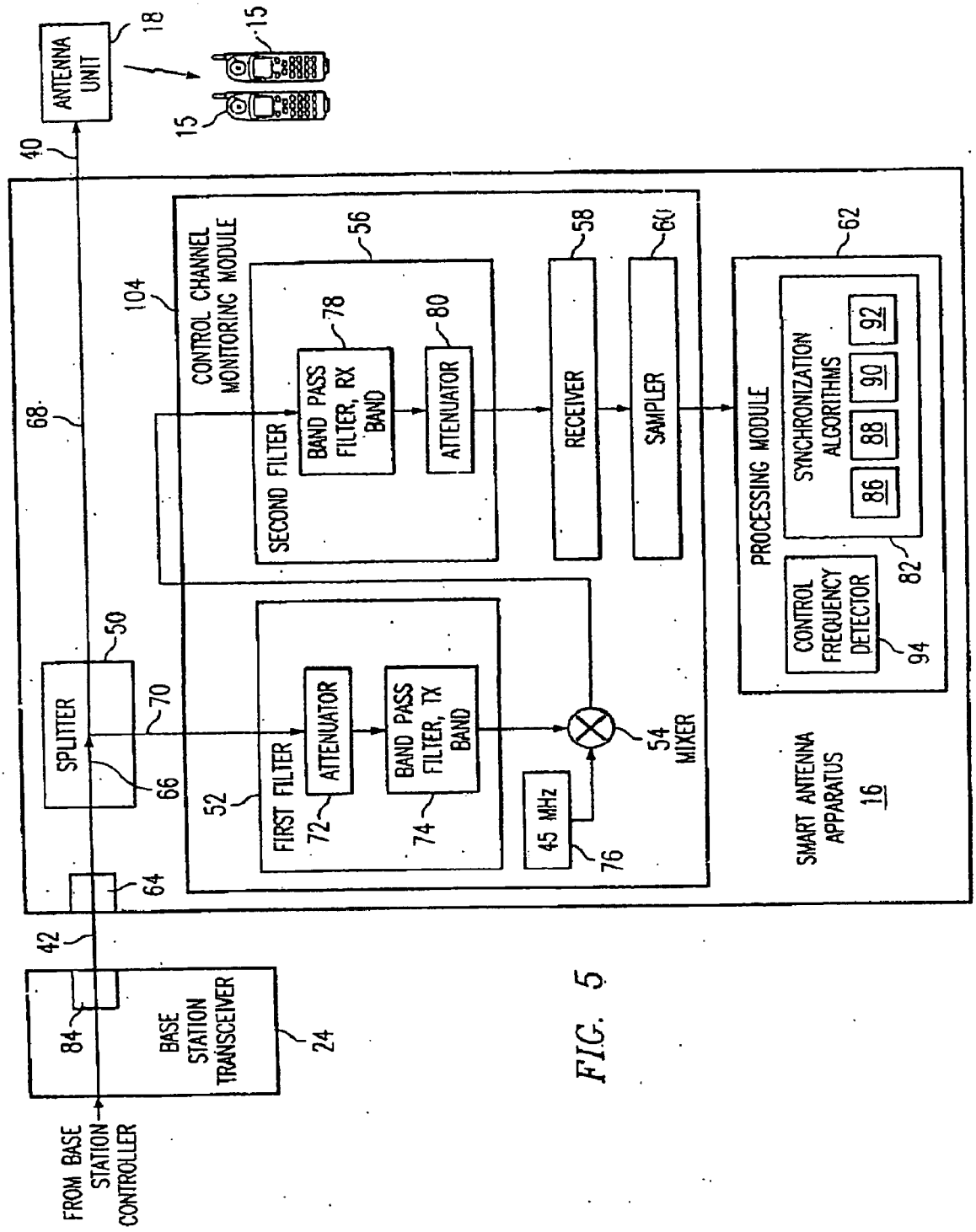
ANTENNA UNIT
18
15
15
40
68
104
CONTROL CHANNEL MONITORING MODULE
56
SECOND FILTER
78
BAND PASS FILTER, RX BAND
80
ATTENUATOR
58
RECEIVER
60
SAMPLER
62
PROCESSING MODULE
SYNCHRONIZATION ALGORITHMS
86
88
90
92
82
CONTROL FREQUENCY DETECTOR
94
50
SPLITTER
70
66
52
FIRST FILTER
72
ATTENUATOR
74
BAND PASS FILTER, TX BAND
45 MHz
76
54
MIXER
SMART ANTENNA APPARATUS
16
64
42
84
BASE STATION TRANSCEIVER
24
FROM BASE STATION CONTROLLER

FIG. 5