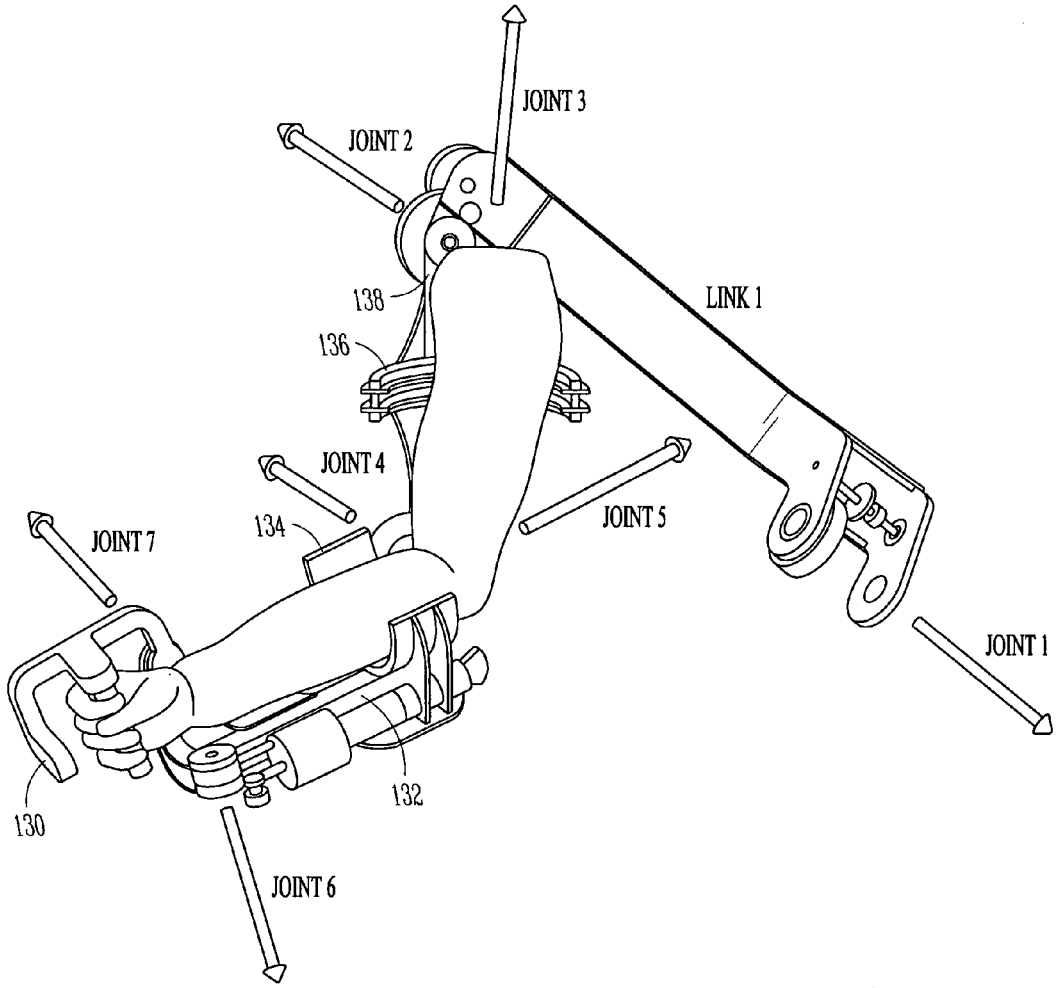
JOINT 3
JOINT 2
138
LINK 1
136
JOINT 4
JOINT 5
134
JOINT 7
JOINT 1
132
130
JOINT 6

FIG. 5