FIG.1

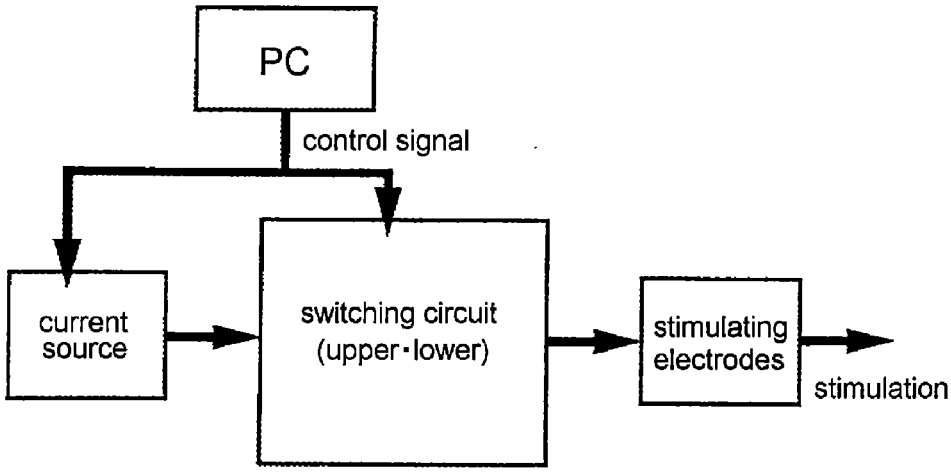
PC
control signal
current source
switching circuit (upper·lower)
stimulating electrodes
stimulation

FIG.2

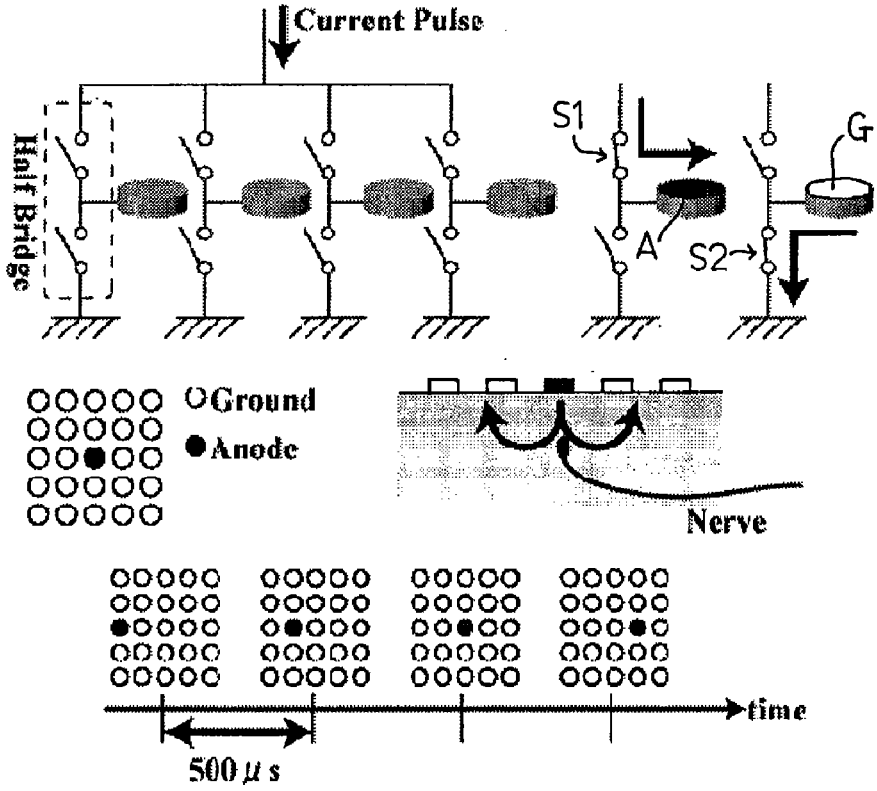
Current Pulse
Half Bridge
S1
G
A
S2
Ground
Anode
Nerve
time
500 μs