FIG.13

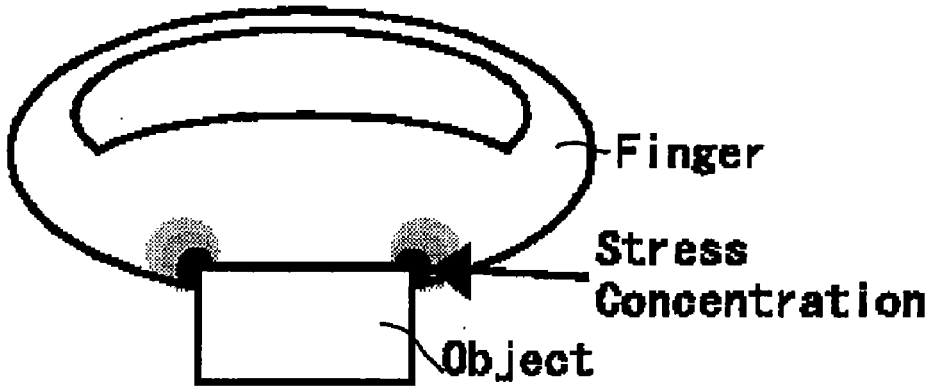
Finger
Stress
Concentration
Object

FIG.14

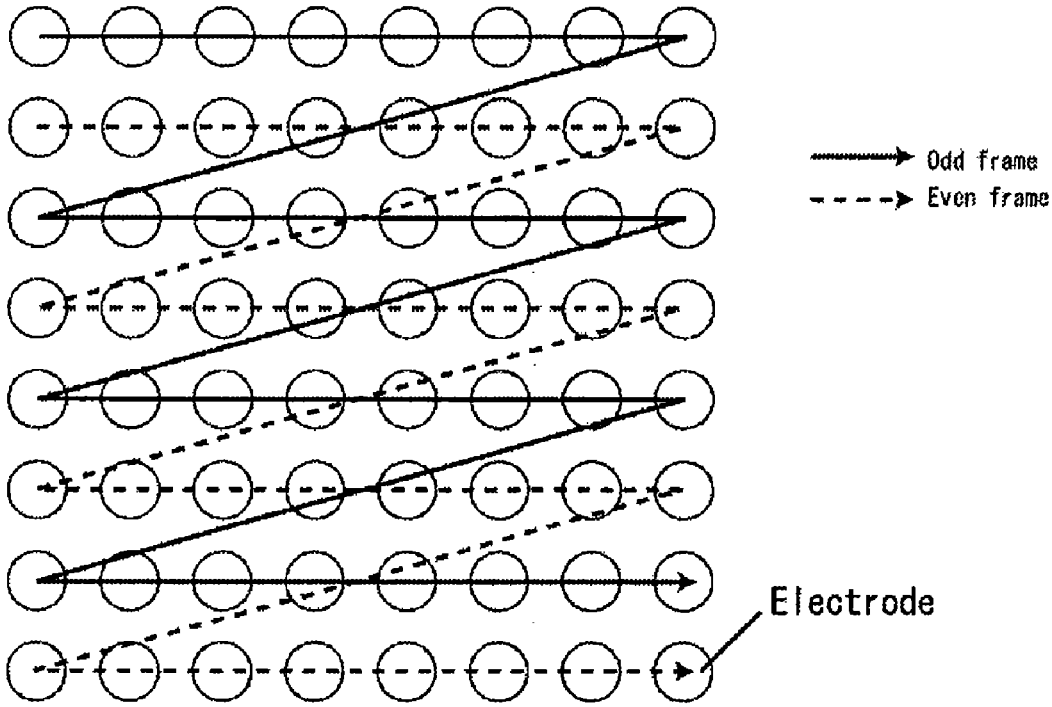
Odd frame
Even frame
Electrode