FIG.17

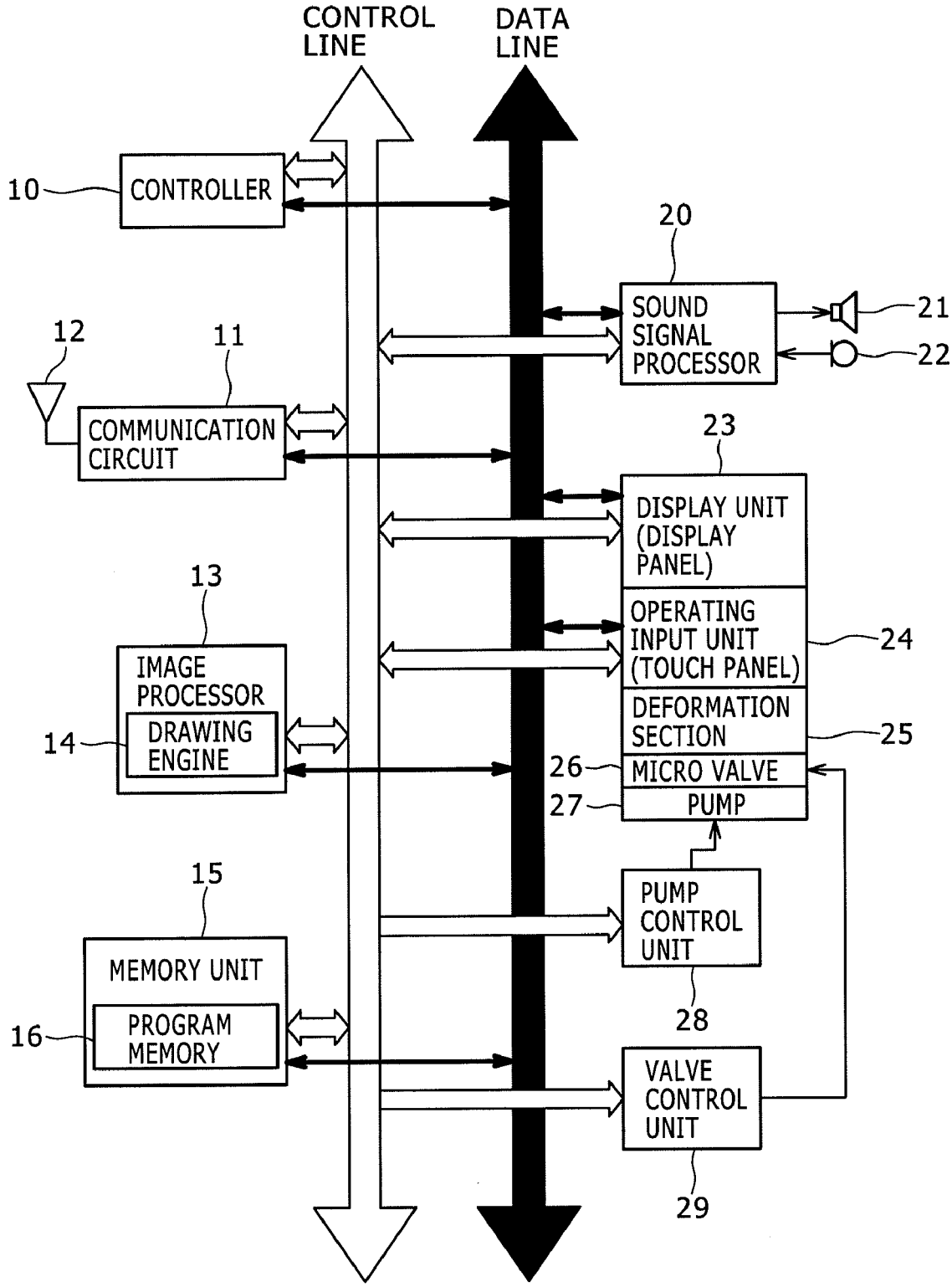
CONTROL LINE
DATA LINE
10
CONTROLLER
20
SOUND SIGNAL PROCESSOR
21
22
12
11
COMMUNICATION CIRCUIT
23
DISPLAY UNIT (DISPLAY PANEL)
13
OPERATING INPUT UNIT (TOUCH PANEL)
24
IMAGE PROCESSOR
DRAWING ENGINE
14
DEFORMATION SECTION
25
26
MICRO VALVE
27
PUMP
15
PUMP CONTROL UNIT
MEMORY UNIT
28
16
PROGRAM MEMORY
VALVE CONTROL UNIT
29