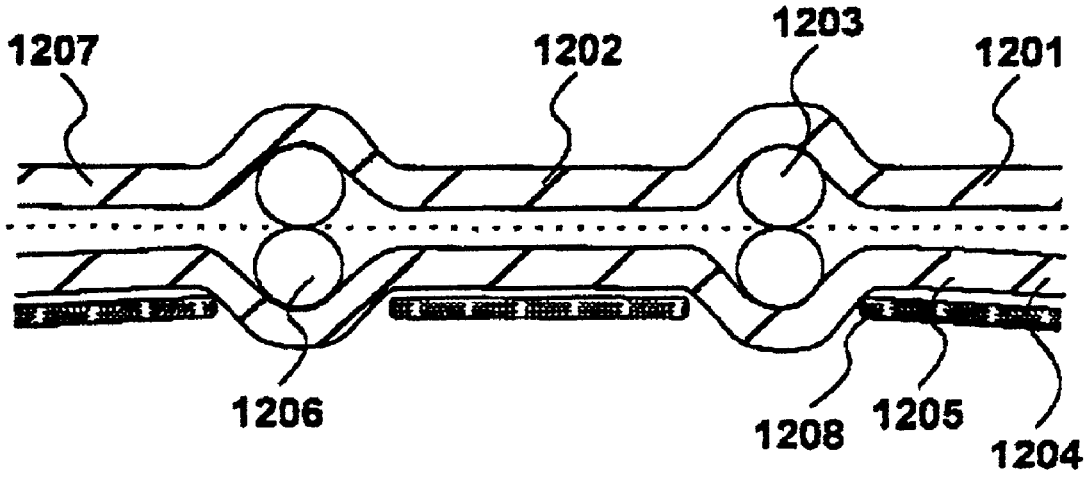

Figure 12A

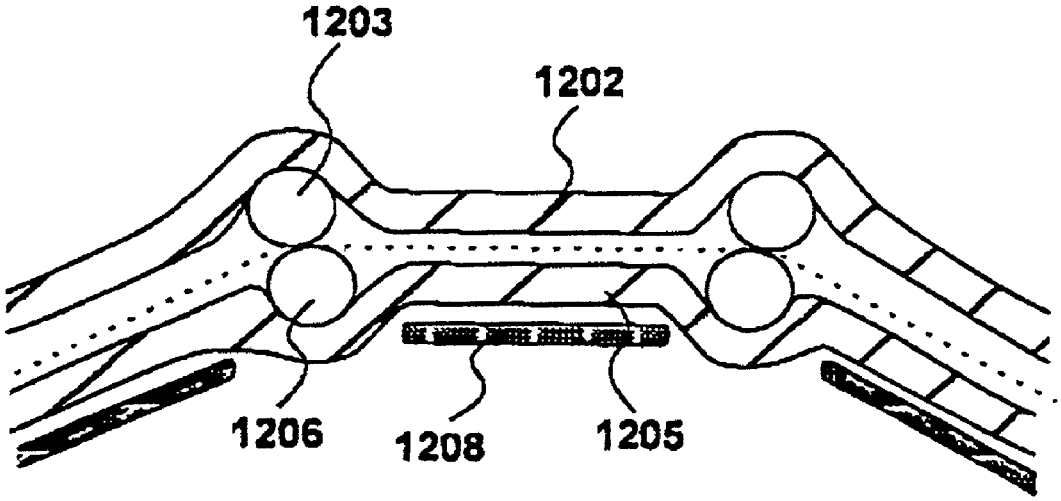

Figure 12B