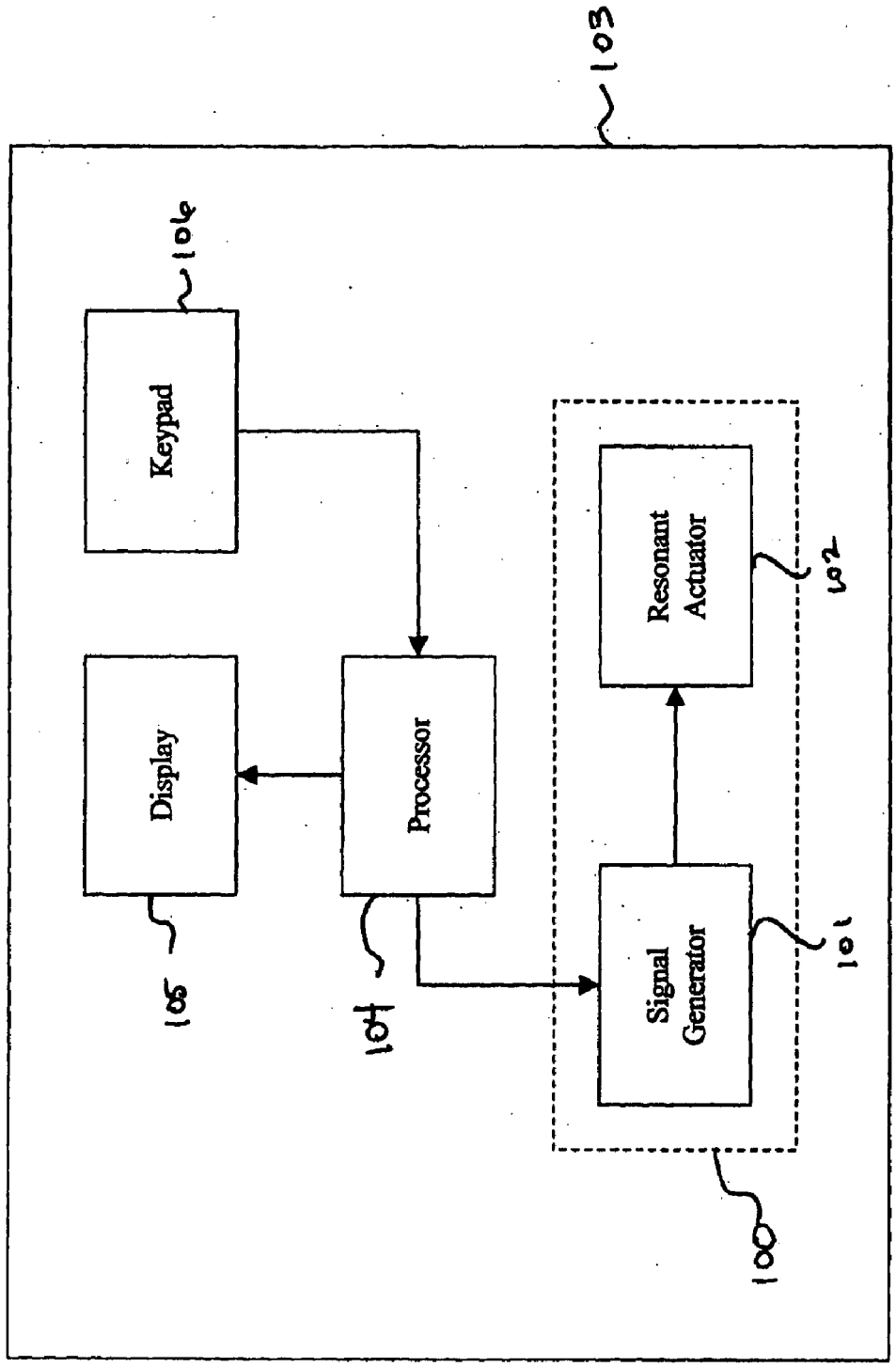
103
Keypad
106
Display
105
Processor
104
Resonant Actuator
102
Signal Generator
101
100

Figure 1