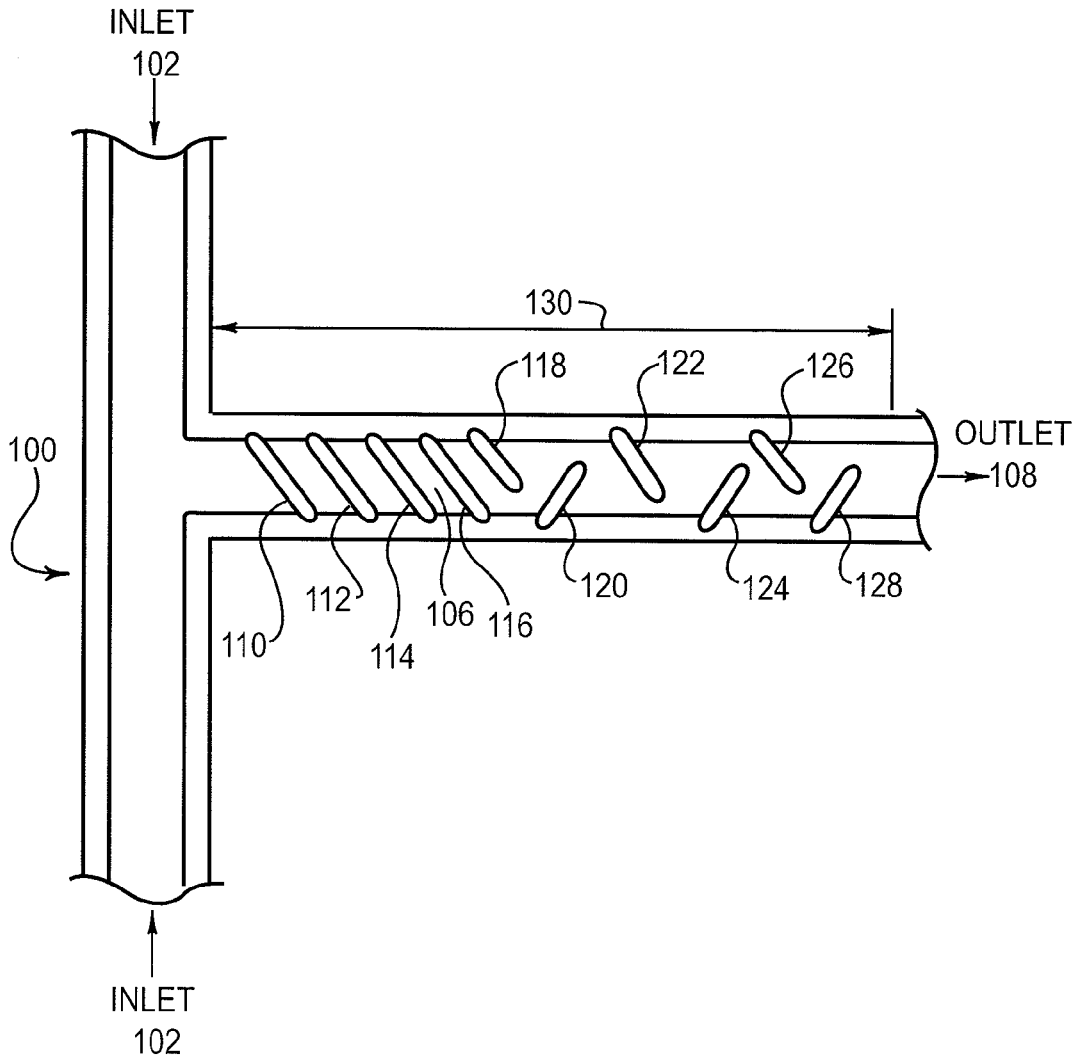
INLET
102
130
118
122
126
OUTLET
108
100
110
112
114
106
116
120
124
128
INLET
102

FIGURE 1