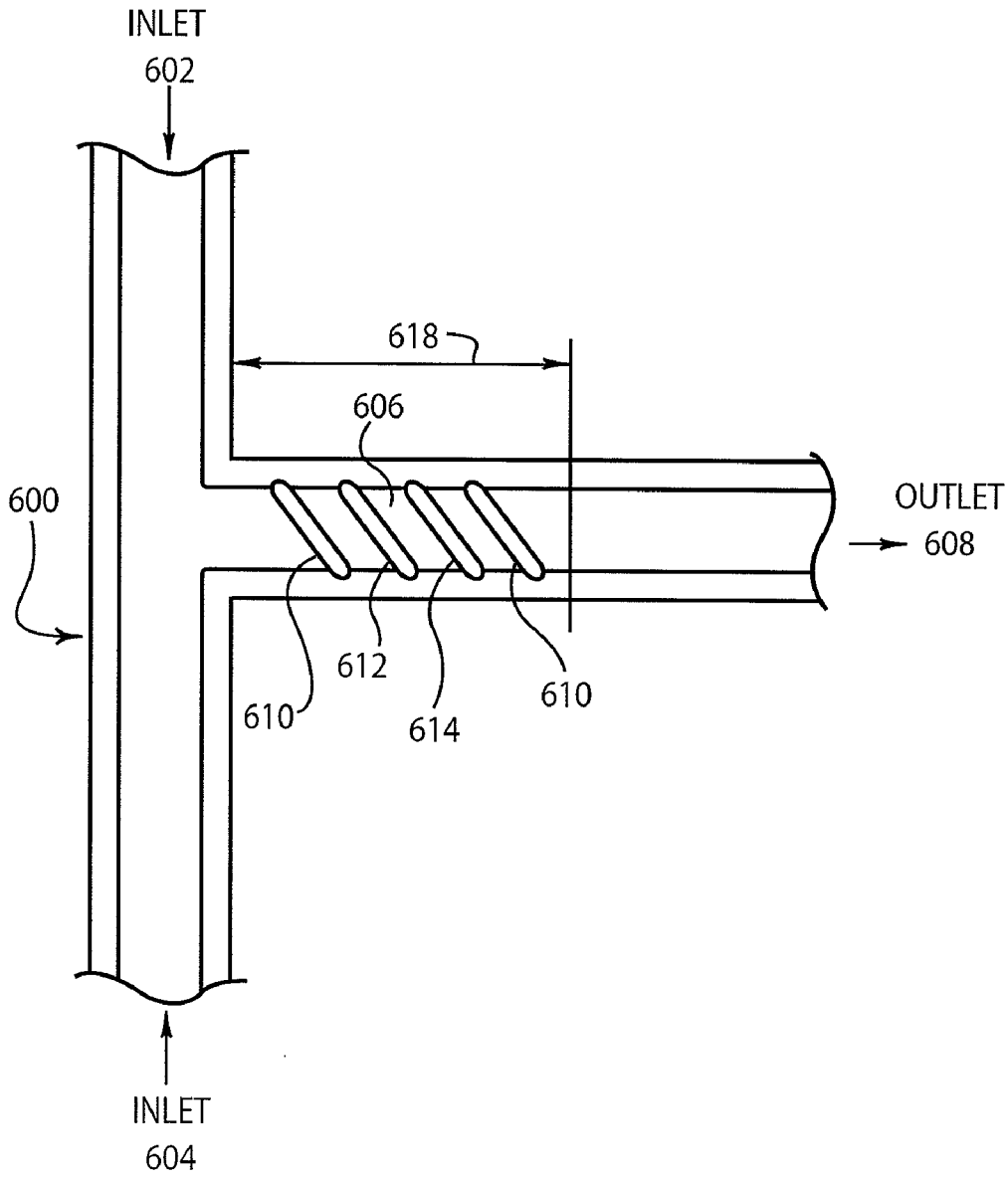

FIGURE 6