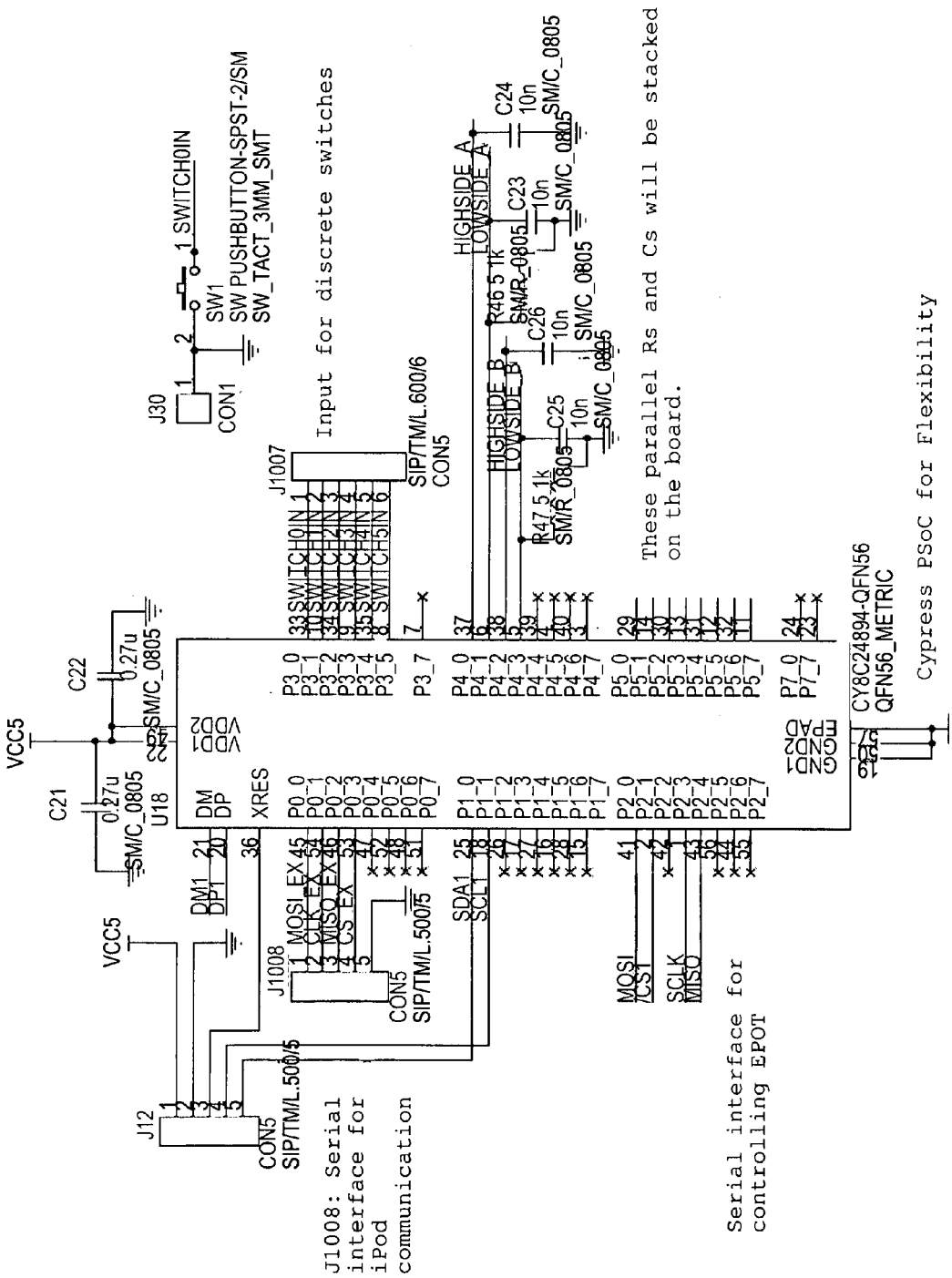
J30
CON1
SW1
SW PUSHBUTTON-SPST-2/SM
SW_TACT_3MM_SMT
SWITCH0IN
Input for discrete switches
J1007
SIP/TM/L.600/6
CON5
HIGHSIDE_A
LOWSIDE_A
HIGHSIDE_B
LOWSIDE_B
R46 5 1k
R47 5 1k
SM/R_0805
C23
C24
C25
C26
10n
SM/C_0805
These parallel Rs and Cs will be stacked on the board.
VCC5
C21
C22
0.27u
U18
DM
DP
XRES
VDD1
VDD2
GND1
GND2
EPAD
CY8C24894-QFN56
QFN56_METRIC
Cypress PSoC for Flexibility
J12
CON5
SIP/TM/L.500/5
J1008
CON5
SIP/TM/L.500/5
MOSI_EX
CLK_EX
MISO_EX
CS_EX
SDA1
SCL1
MOSI
CS1
SCLK
MISO
J1008: Serial interface for iPod communication
Serial interface for controlling EPOT

Fig. 10