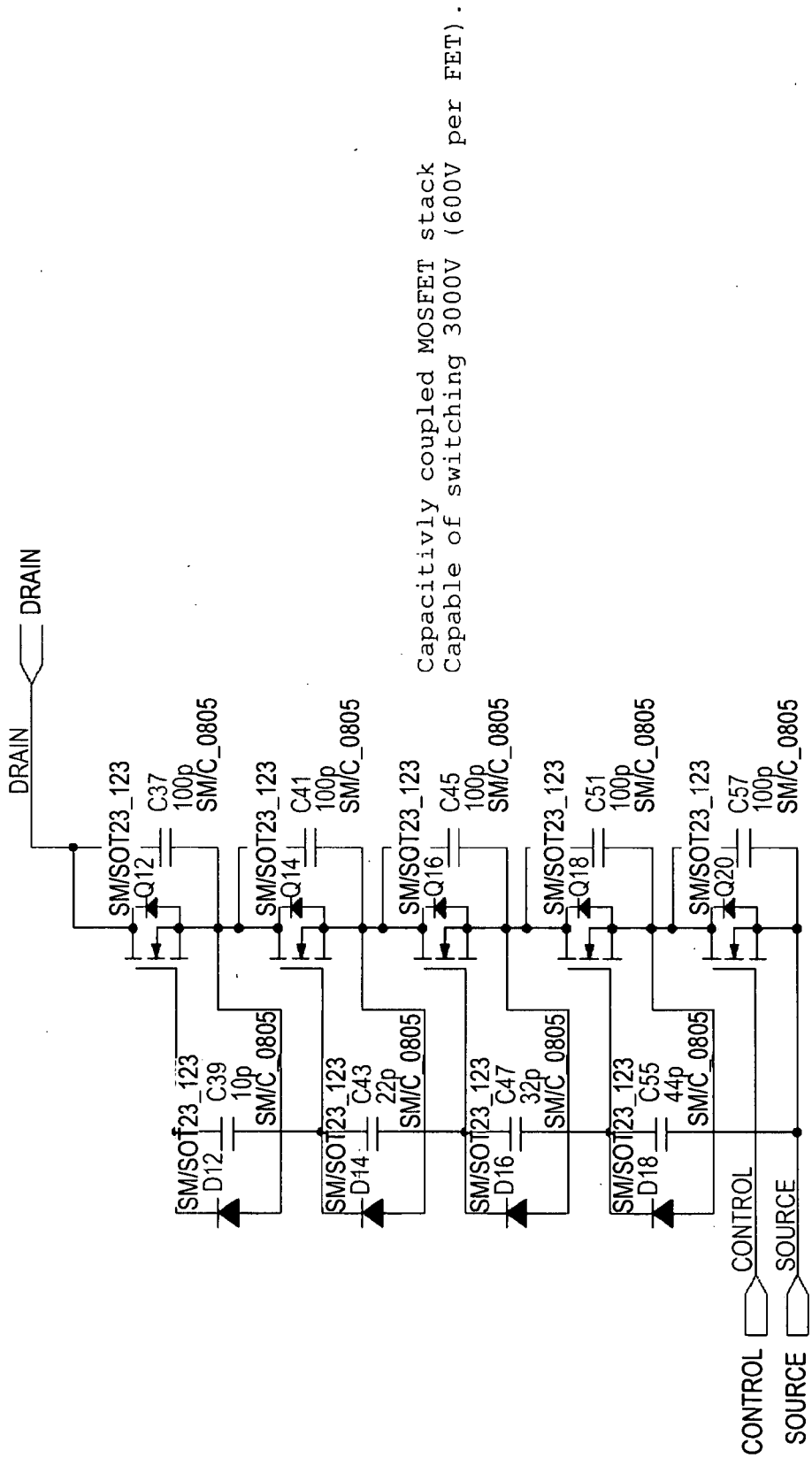
Capacitively coupled MOSFET stack
Capable of switching 3000V (600V per FET).
DRAIN
DRAIN
SM/SOT23_123
Q12
C37
100p
SM/C_0805
SM/SOT23_123
Q14
C41
100p
SM/C_0805
SM/SOT23_123
Q16
C45
100p
SM/C_0805
SM/SOT23_123
Q18
C51
100p
SM/C_0805
SM/SOT23_123
Q20
C57
100p
SM/C_0805
SM/SOT23_123
D12
C39
10p
SM/C_0805
SM/SOT23_123
D14
C43
22p
SM/C_0805
SM/SOT23_123
D16
C47
32p
SM/C_0805
SM/SOT23_123
D18
C55
44p
SM/C_0805
CONTROL
SOURCE
CONTROL
SOURCE

Fig. 11