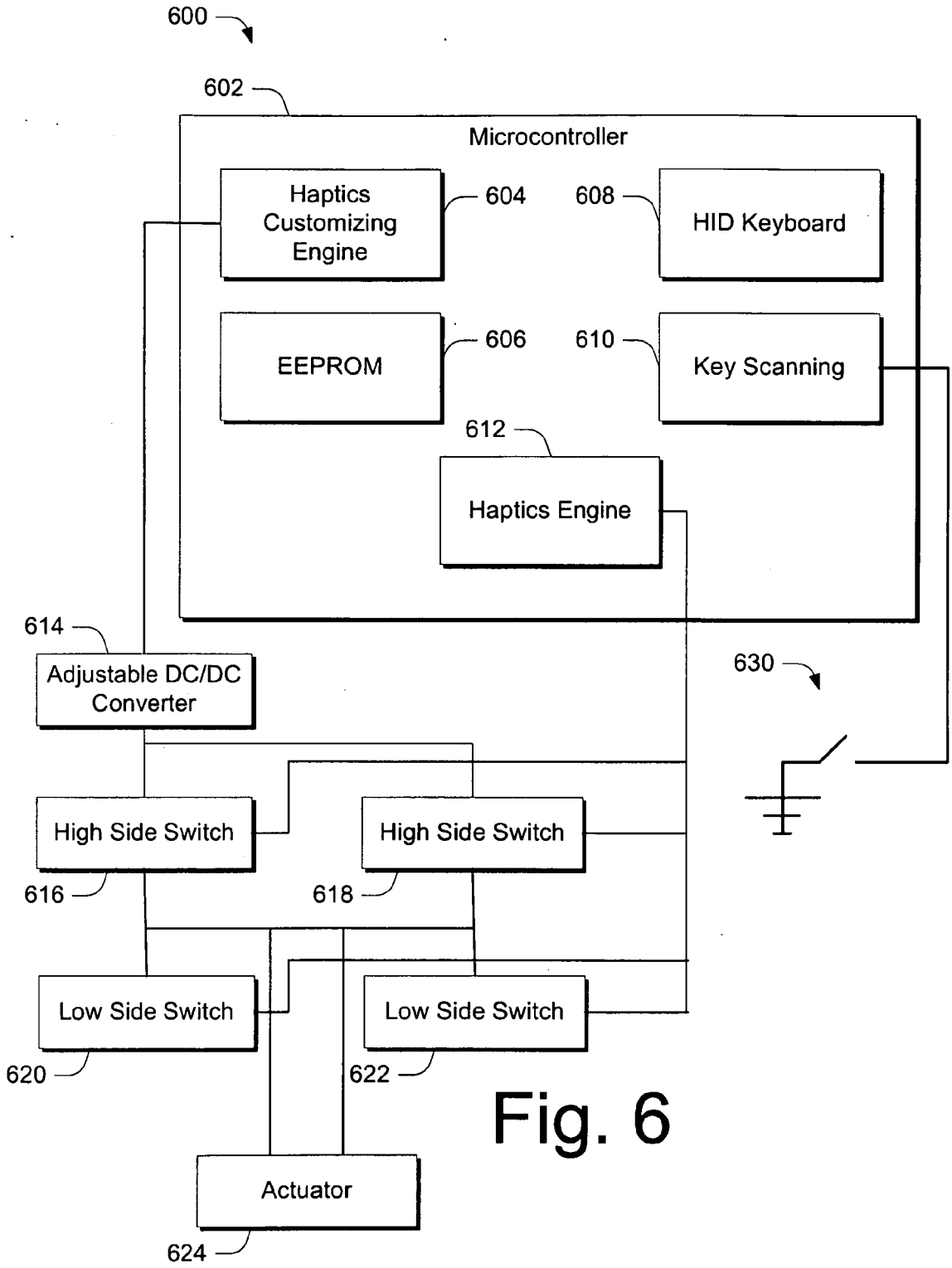
600
602
Microcontroller
Haptics Customizing Engine
604
608
HID Keyboard
EEPROM
606
610
Key Scanning
612
Haptics Engine
614
Adjustable DC/DC Converter
630
High Side Switch
High Side Switch
616
618
Low Side Switch
Low Side Switch
620
622
Actuator
624

Fig. 6