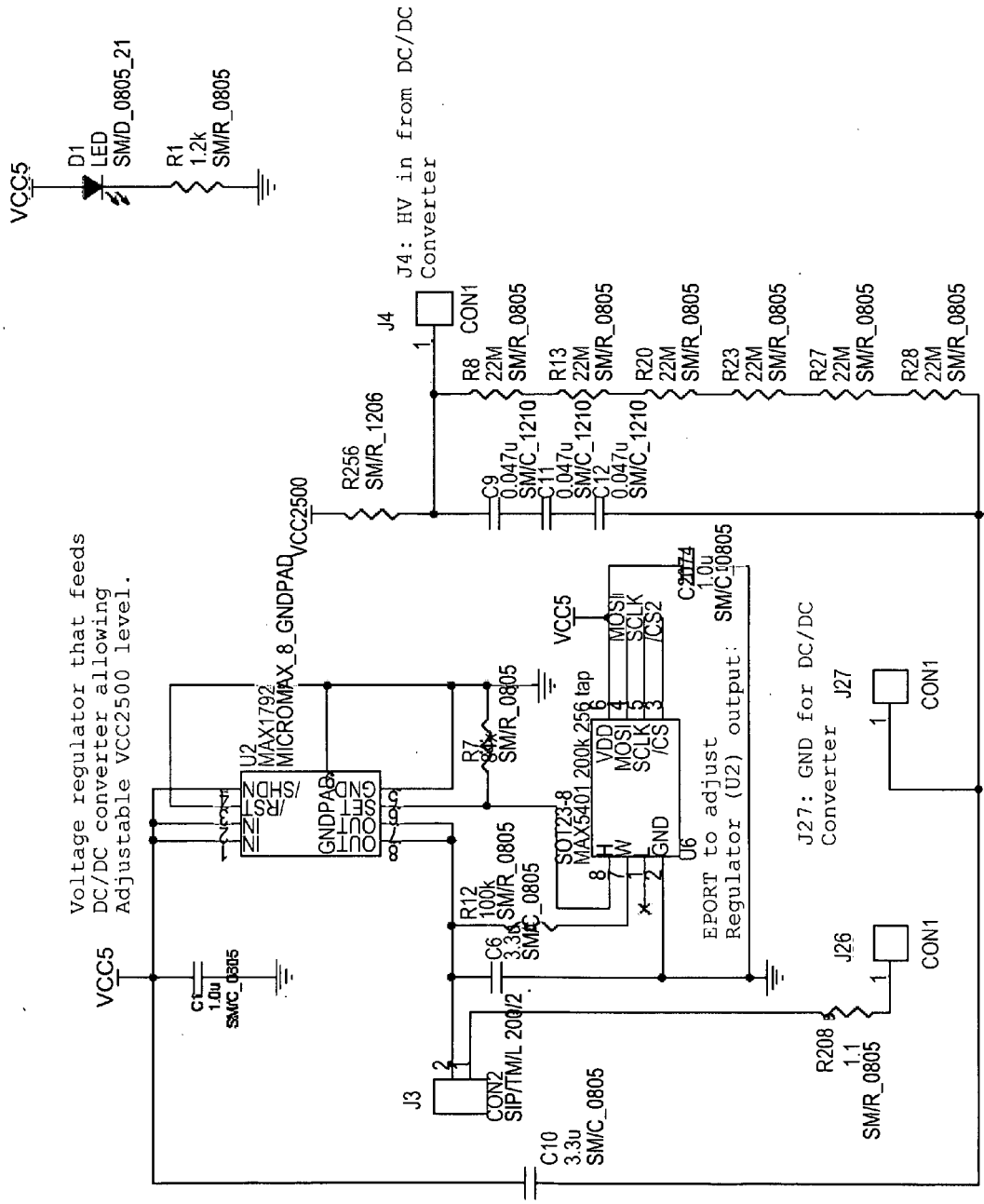
VCC5
D1
LED
SM/D_0805_21
R1
1.2k
SM/R_0805
J4: HV in from DC/DC Converter
J4
CON1
R8
22M
SM/R_0805
R13
22M
SM/R_0805
R20
22M
SM/R_0805
R23
22M
SM/R_0805
R27
22M
SM/R_0805
R28
22M
SM/R_0805
R256
SM/R_1206
C9
0.047u
SM/C_1210
C11
0.047u
SM/C_1210
C12
0.047u
SM/C_1210
VCC2500
Voltage regulator that feeds DC/DC converter allowing Adjustable VCC2500 level.
U2
MAX1792
MICROMAX_8_GNDPAD
IN
IN
/RST
/SHDN
GNDPAD
OUT
OUT
SET
GND
R7
SM/R_0805
VCC5
MOSI
SCLK
/CS2
C2074
1.0u
SM/C_0805
SOT23-8
MAX5401 200k 256 tap
VDD
MOSI
SCLK
/CS
H
W
GND
U6
EPORT to adjust Regulator (U2) output:
J27: GND for DC/DC Converter
J27
CON1
R12
100k
SM/R_0805
C6
3.3u
SM/C_0805
J26
CON1
VCC5
C1
1.0u
SM/C_0805
J3
CON2
SIP/TM/L 200/2
R208
1.1
SM/R_0805
C10
3.3u
SM/C_0805

Fig. 7