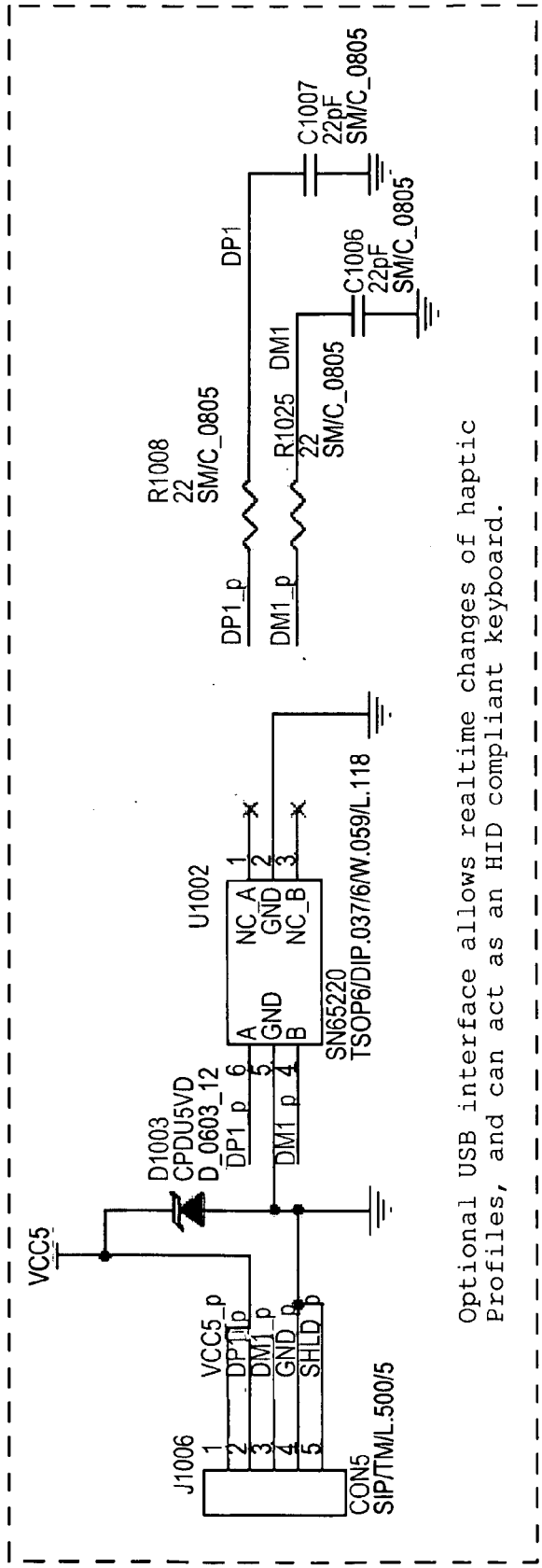
VCC5
J1006
CON5
SIP/TM/L.500/5
VCC5_p
DP1_p
DM1_p
GND_p
SHLD_p
D1003
CPDU5VD
D_0603_12
U1002
SN65220
TSOP6/DIP.037/6/W.059/L.118
NC_A
GND
NC_B
A
GND
B
R1008
22
SM/C_0805
R1025
22
SM/C_0805
DP1
DM1
C1006
22pF
SM/C_0805
C1007
22pF
SM/C_0805
Optional USB interface allows realtime changes of haptic
Profiles, and can act as an HID compliant keyboard.

Fig. 8