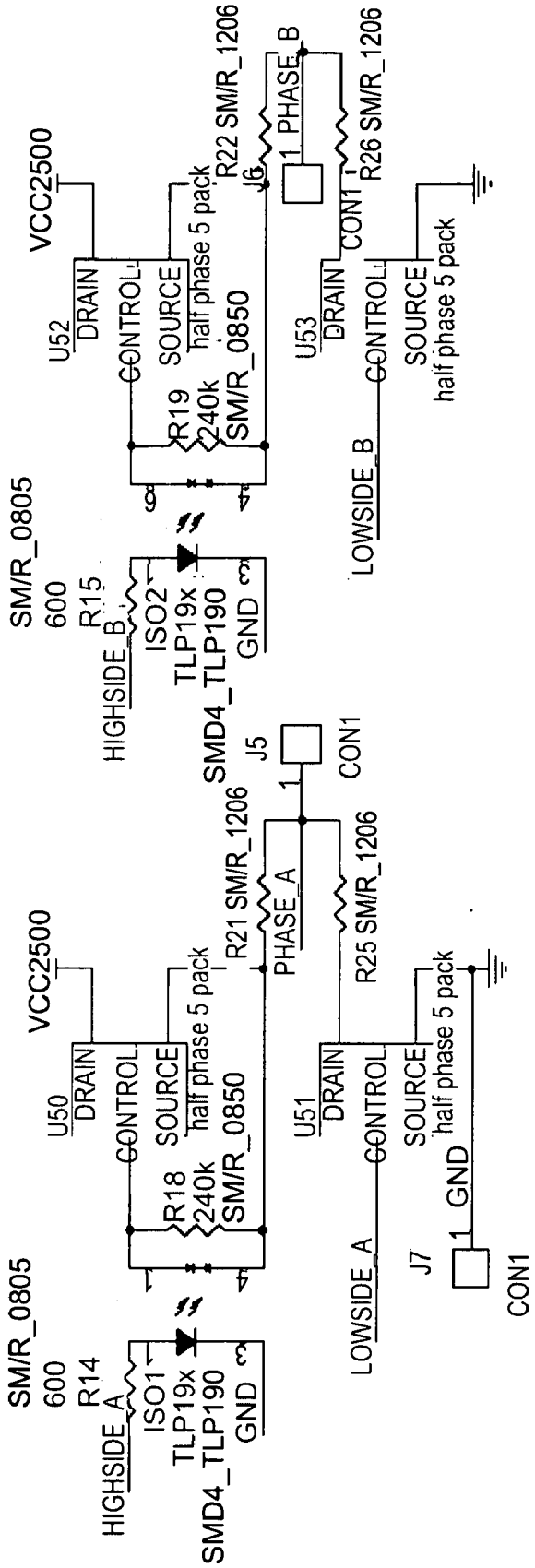

See next page for details of U50-U53.

R21, 22, 25 and 26 set the slew rate of the actuator.

ISO1+R18 and ISO2+R19 are used to easily drive the high-sde n-channel FET stacks.

Fig. 9