Layer	Material	Thickness	Sheet Resistance	Dielectric Constant
Poly	Poly-Si	430A	-	-
GI	SiO2	750A	-	4.0
Gate	MoW	3000A	0.67	-
ILD	SiNx/SiO2	3100A/3700A	-	7.5/4.0
Data	Ti/Al/Ti	1750/2750/500	0.14	-
Pixel Electrode	IZO	500A	-	-
Organic	Organic	0.6 um (on PE) 0.8 um (on Data)	-	3.5
Common Electrode	IZO	500A	-	-
PS	Organic	2.1 um	-	-

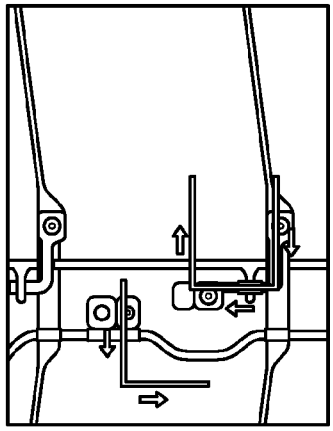

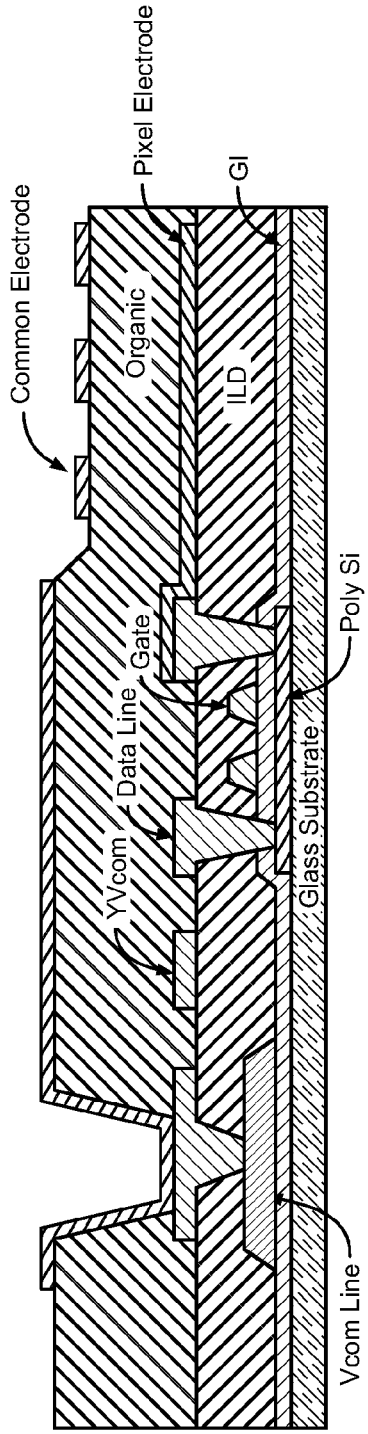

FIG. 43