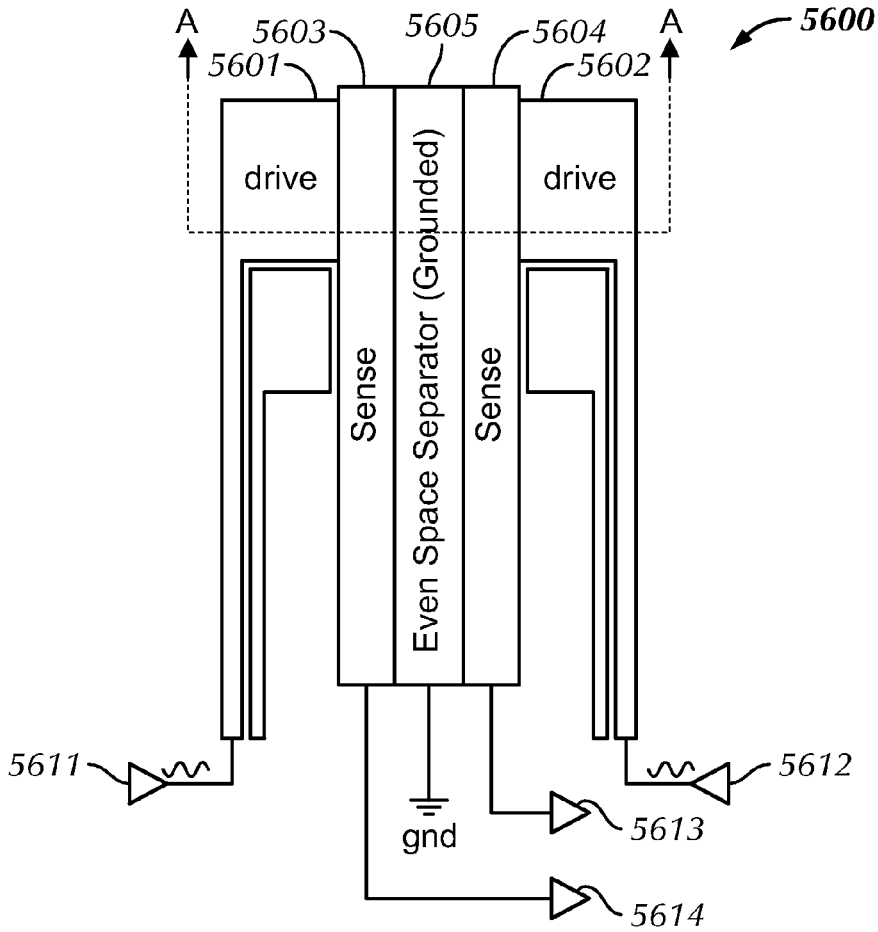
A
5603
5605
5604
A
5600
5601
5602
drive
drive
Sense
Even Space Separator (Grounded)
Sense
5611
5612
gnd
5613
5614

FIG. 56

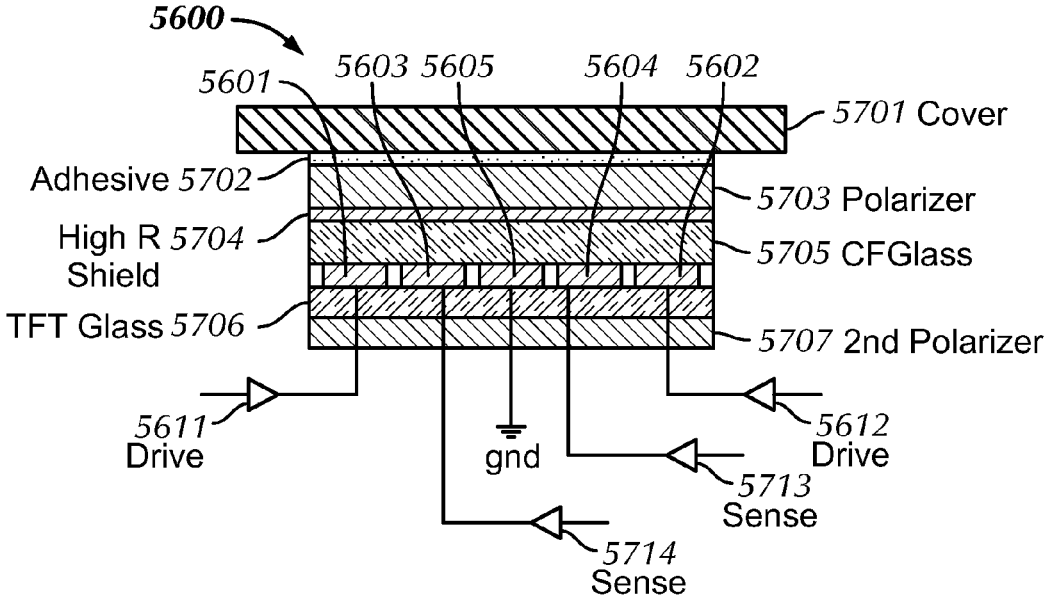
5600
5601
5603 5605
5604
5602
5701 Cover
Adhesive 5702
5703 Polarizer
High R 5704
Shield
5705 CFGlass
TFT Glass 5706
5707 2nd Polarizer
5611
Drive
gnd
5612
Drive
5713
Sense
5714
Sense

FIG. 57