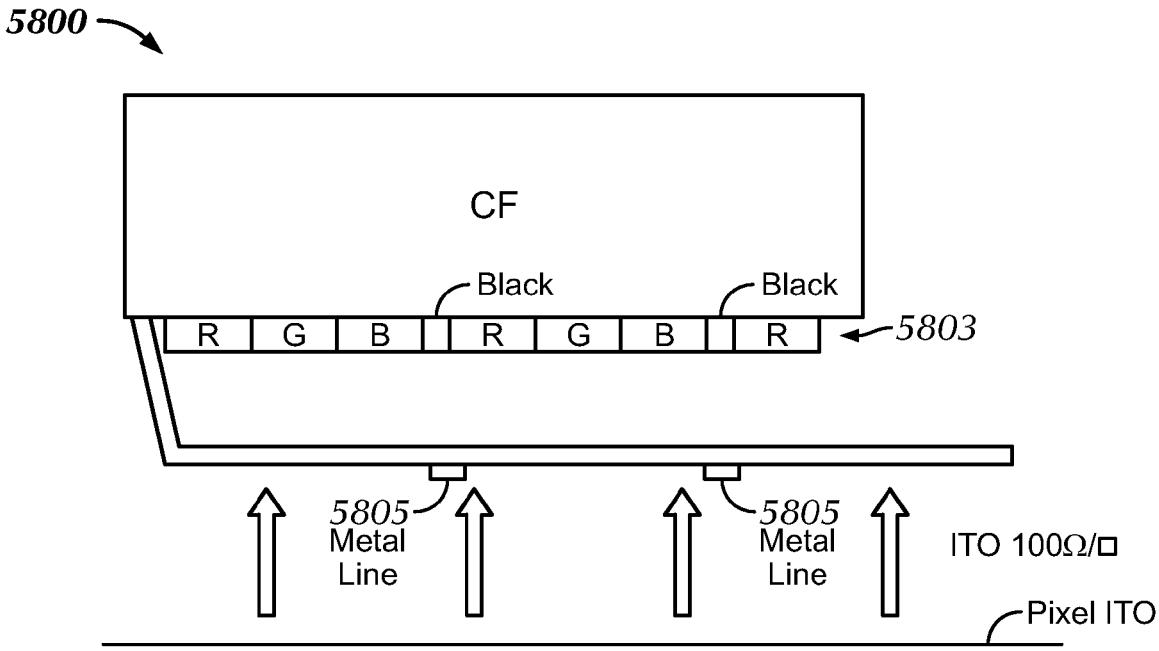
5800
CF
Black
Black
R
G
B
R
G
B
R
5803
5805
Metal
Line
5805
Metal
Line
ITO 100Ω/□
Pixel ITO

FIG. 58