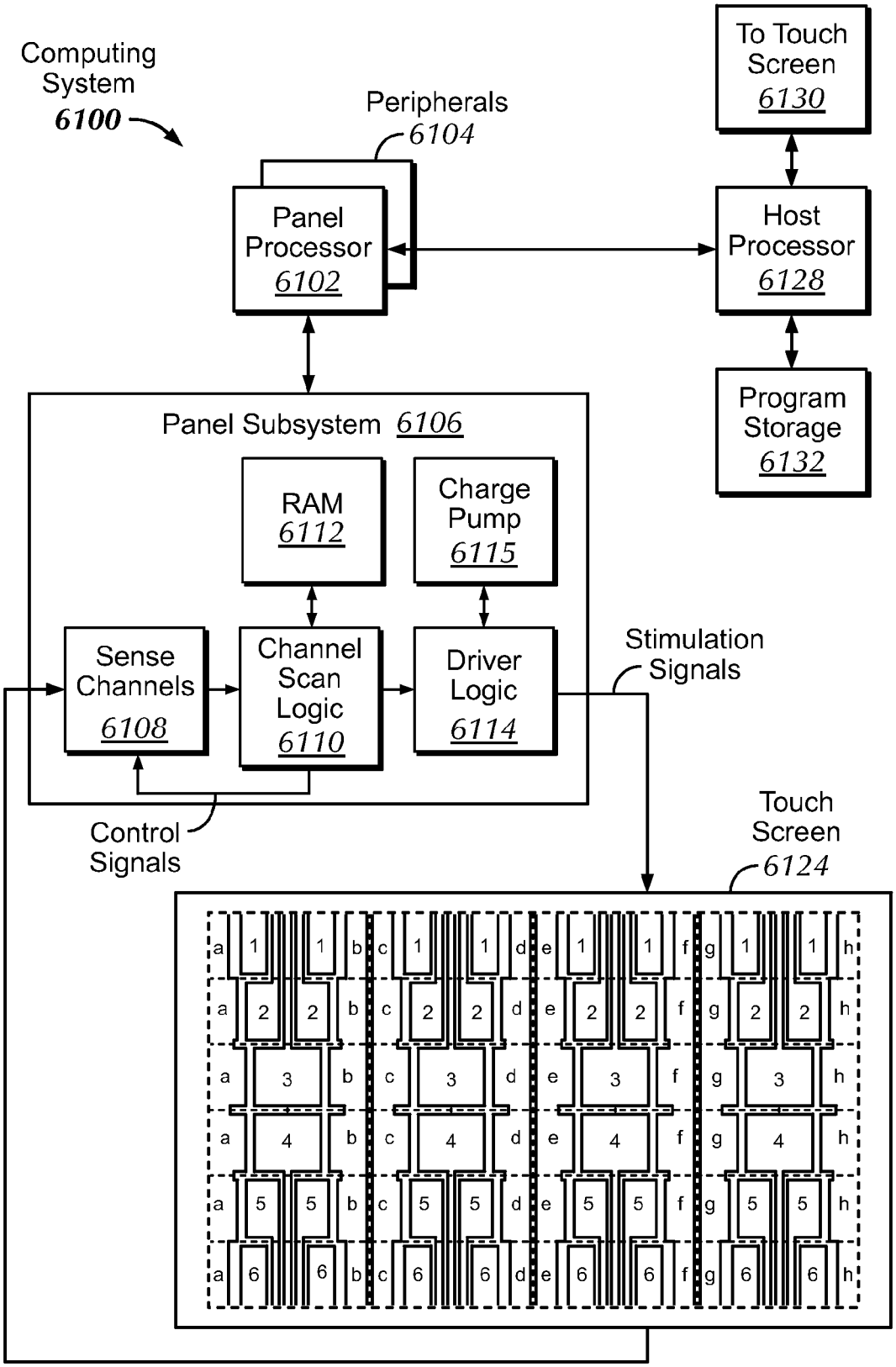
Computing System
6100
Peripherals
6104
Panel Processor
6102
To Touch Screen
6130
Host Processor
6128
Program Storage
6132
Panel Subsystem 6106
RAM
6112
Charge Pump
6115
Sense Channels
6108
Channel Scan Logic
6110
Driver Logic
6114
Stimulation Signals
Control Signals
Touch Screen
6124

FIG. 61