FIG. 1

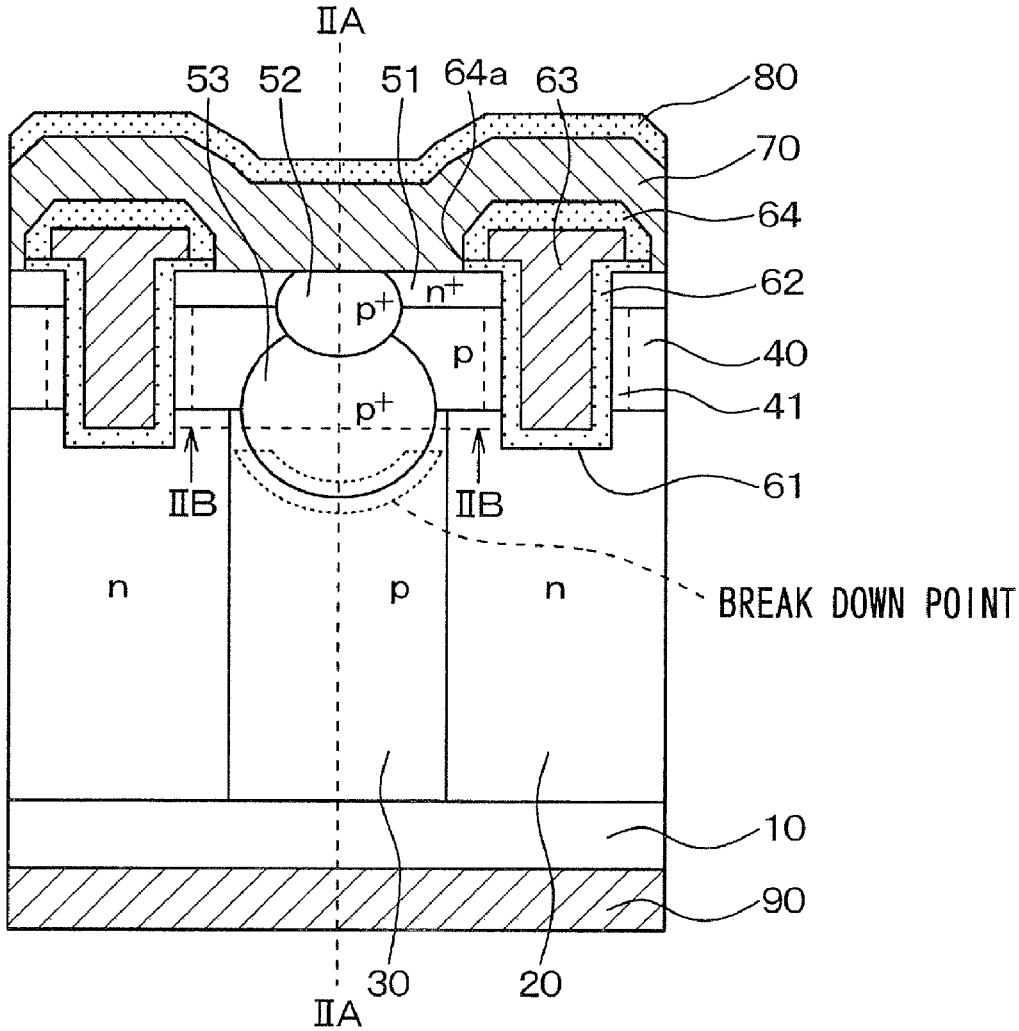
IIA
53
52
51
64a
63
80
70
64
62
40
41
61
p+
n+
p
p+
IIB
IIB
n
p
n
BREAK DOWN POINT
10
90
30
20
IIA